LA-UR-93-3046

c. 2

# Drafting of the ENDF/B-VI Data for Fission Products and Actinides

*A. K. Martinez*
*Theoretical Division*
*Los Alamos National Laboratory*
*MS B243*
*Los Alamos, New Mexico 87545*

For Reference

Not to be taken from this room

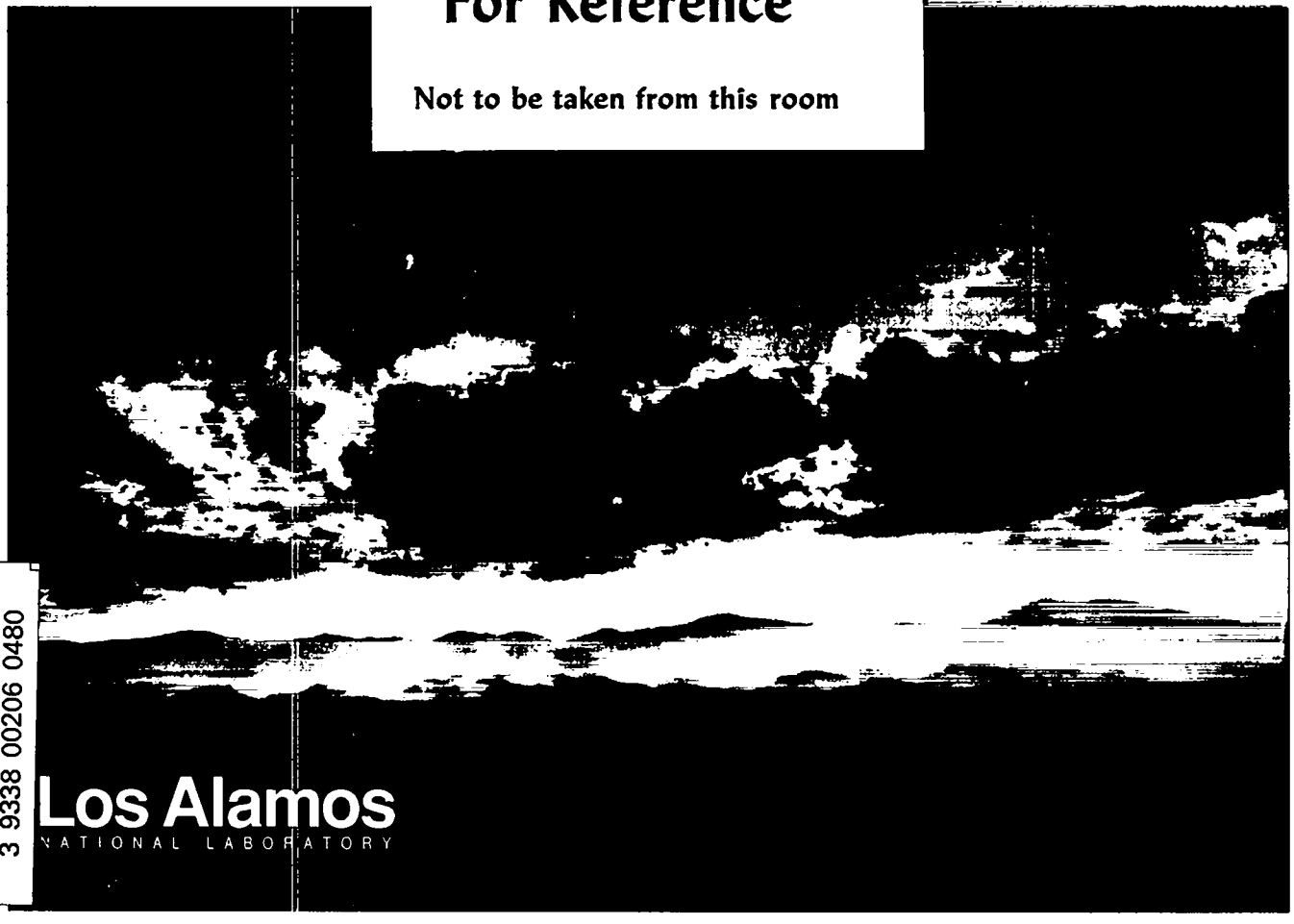

LOS ALAMOS NATIONAL LABORATORY
3 9338 00206 0480

Los Alamos
NATIONAL LABORATORY

Photograph: by Chris J. Lindberg

# Drafting of the ENDF/B-VI Data for Fission Products and Actinides

A. K. Martinez

Early in the spring of 1991, the Theoretical Division (T-2) at Los Alamos National Laboratory requested that the ENDF/B-VI data be used to draft the corresponding decay chains on a computer. By having the decay chains in a computer file, one can easily make changes as the data is updated. The format of the diagrams on the computer provides immediate information which is much less obvious in the tabular format of the data.

The decay chains have been drafted using Lightening Textures Version 1.6 on a Macintosh IIx at Los Alamos National Laboratory. Each diagram consists of frame boxes, dash boxes, lines, and vectors. The ENDF/B-VI data is represented with solid lines and frame boxes. The dashed boxes and lines represent data that is not included in ENDF/B-VI, but is relevant to the understanding of the nuclear data. The data in the dashed format came from the JEF-2 Radioactive Decay Data. Thus, each nuclide is represented by a dashed or framed box. In each box, the nuclide is represented by its mass number(A), atomic number(Z), and symbol. Unlike the ENDF/B-VI data file where half-lives are given in seconds, the half-life is shown in seconds(s), minutes(m), hours(h), days(d) or years(a) directly underneath the nuclide identification. Underneath the half-life, the average recoverable decay energy is shown in keV. Above the boxes containing nuclides 66-Cr through 172-Hf, the recommended independent U-235 thermal fission yield is shown. Vectors and lines indicate the decay modes. The branching ratio is located next to the corresponding vector or line. The information for the nuclides with an "sf" (spontaneous fission) in the upper left hand corner, were confirmed using an unpublished CINDER'90 file.

In order to produce the diagrams with the ENDF/B-VI data in an efficient way, the following FORTRAN 77 programs were used to extract data from files and place it into Textures format. The program rdfp2.f, which uses the input file fp (fission products), was written by D. C. George. The program rdfp3.f, which uses the input file dcyf (decay), was written by D. C. George and A. K. Martinez. These files contain the ENDF/B-VI data showing the symbol, Z, A, state, half-life, e-beta, e-gamma, e-alpha, rtyp, rfs, q value, and the

LOS ALAMOS NATL. LAB. LIBS.
3 9338 00206 0480

branching ratio for each nuclide. Both programs work similarly by calculating the correct position to place the symbol, Z, A, half-life, decay energy, and branching ratios from the data files into a Textures diagram. The program dash.f was written by A. K. Martinez to calculate the position of many dashed boxes and their half-lives from the ylds (yields) file. The program yields.f, written by A. K. Martinez, was used to extract the recommended independent yield from the ylds file and put it into Textures format. The program half.f was written by A. K. Martinez to convert the half lives (given in seconds) into minutes, hours, days, and years. The program energy.f was written by A. K. Martinez to calculate the average recoverable decay energies by adding the alpha decay(eV), gamma decay(eV), and beta decay(eV) for each nuclide and dividing by one thousand. The result is an average recoverable decay energy in keV. Ri.f was written by A. K. Martinez to extract the recommended independent yield value from the ylds file. Half.f, energies.f, and ri.f were used to proof the final draft. The program jefprog is a UNIX shell script which calls the FORTRAN 77 program jefprog1.f. These programs were written by A. K. Martinez and J. M. Campbell. Jefprog sorts each appropriate Textures program file and prepares it for the program jefprog1.f which calculates the position of the average recoverable decay energy for each nuclide. In addition to using programs to place the data into the diagrams, much of the data from the JEF-2 file had to be entered by hand. All the computer-generated diagrams then had to be checked and adjusted manually.

The motivation for this work is to provide diagrams for a report on ENDF/B-VI data, similar to those in Ref.(1). The diagrams, which includes all the ENDF/B-VI data and the JEF-2 data, consist of 43 pages of decay chains. The final draft of the ENDF/B-VI decay chains was finished in July 1993. This work was completed over three summers at Los Alamos National Laboratory with the guidance of T. R. England, W. B. Wilson, and D. C. George.

References:


1. T. R. England, W. B. Wilson, R. E. Schenter, F. M. Mann, "Summary of ENDF/B-V Data for Fission Products and Actinides," Los Alamos National Laboratory informal document LA-UR 83-1285, EPRI NP-3787 (December 1984).

2. F. W. Walker, J. R. Parrington, F. Feiner, *Nuclides and Isotopes , 14th. Ed.*, (General Electric Company, San Jose, CA 1989).

3. W. B. Wilson, T. R. England, Unpublished decay path data of CINDER'90 accumulated from ENDF/B-VI, HEDL's Master Decay Library, and other sources as described in W. B. Wilson, *et al.*, "Acceleration Transmutation Studies at Los Alamos with LAHET, MCNP, and CINDER'90", *Proc. Workshop on Simulation of Accelerator Radiation Environments*, January 11-15, 1993, Sante Fe, NM.

4. Preliminary JEF-2 Data supplied by M. Konieczny of the OECD Nuclear Energy Agency and described in J. Blachot and C. Nordborg, "Decay Data Evaluation for JEF-2," presented at the *Symposium on Nuclear Data Evaluation Methodology*, October 12-16, 1992, Brookhaven National Laboratory.

5. T. R. England, J. Katakura, F. M. Mann, C. W. Reich, R. E. Schenter, W. B. Wilson, "Decay Data Evaluation for ENDF/B-VI," *Presentation at the Symposium on Nuclear Data Evaluation Methodology*, Brookhaven National Laboratory, Upton, New York, October 12-16, 1992, LA-UR-92-3785.

# Programs used to draft ENDF/B-VI Decay Chains

1. rdfp2.f
2. rdfp3.f
3. yields.f
4. ri.f
5. dash.f
6. energy.f
7. halflife.f
8. jefprog
9. jefprog1.f

```
      program rdfp
      logical iup,ibr
      character*1 ic1,ic2,c,ltou,unit,jc1,jc2
      character*4 aform(12)
      data aform/'(''\p','ut(''',',f6.','2,'',',''',f6','.2,''','){\t'
     x ,'iny ',''',f4','.2,a','1,''}',''')'/
c  read fission product file and format nuclide id,z,a, decay energy,
c  half life and branching ratios for tek.
      iup=.false.
      ibr=.false.
      open(unit=1,file='fp1',status='old',form='formatted')
      open(unit=8,file='output',status='unknown',form='formatted')
  4   read(1,*,end=1000) xbox,ybox
      xstart=xbox+.01
      ystart=ybox+.2
 5    read(1,10,end=1000)iz,ic1,ic2,ia,hl,bdec,gdec,adec,rt,br,adj
 12   read(1,10,end=1000)jz,jc1,jc2,ja,xhl,xbdec,xgdec,xadec,xt,xb,xad
 10   format(6x,i3,x,2a1,x,i3,10x,e11.4,3(x,e11.4),f5.2,17x,e11.4,f5.2)
c  test for branching ration only
c      write(8,10) iz,ic1,ic2,ia,hl,bdec,gdec,adec,br,adj
c     write(8,10) jz,jc1,jc2,ja,xhl,xbdec,xgdec,xadec,xb,xad
      if(jz.eq.0) then
        br2=xb
        rt2=xt
        ibr=.true.
        go to 12
      endif
c  test for second of pair coordinates already set
      if(iup) go to 14
c  test for two states of same nuclide
      if(ic1.eq.jc1.and.ic2.eq.jc2) then
        x=xstart+.15
        y=ystart-.16
      else
        x=xstart
        y=ystart
      endif
c  test for end of row
      if(iz.eq.999) go to 4
c  look for coordinate adjustment
 14   x=x+adj
c      write(8,*) adj,x,xad,br,xb
      xstart=xstart+adj
c  calculate total decay in kev -- add gamma, beta and alpha decays
      dec=(bdec+gdec+adec)/1000.
      idec=nint(dec)
      unit='s'
c  convert half life to correct units
      if(hl.gt.60.) then
        unit='m'
        hl=hl/60.
      endif
      if(hl.gt.60.) then
        unit='h'
        hl=hl/60.
      endif
      if(hl.gt.24..and.unit.eq.'h') then
        unit='d'
        hl=hl/24.
      endif
      if(hl.gt.365.2499) then
        unit='a'
        hl=hl/365.25
```

```
      endif
      c=ltou(ic1)
      y1=y
      if(iup) y1=y1-.01
      write(8,20) x,y1,ia,iz,c,ic2
20    format('\put(',f6.2,',',f6.2,'){\tiny $^{',i3,'}_{',i3,'}$'2a1,'}'
     x )
      if(iup) then
         x1=x+.1
         y1=y+.06
         if(ia.ge.100) x1=x1+.05
         write(8,22) x1,y1
22       format('\put(',f6.2,',',f6.2,'){\ttiny m}')
         iup=.false.
      endif
      x=x+.02
      y=y-.11
      if(hl.ge. 0.) then
        aform(9)='',f4'
        aform(10)='.2,a,'
        if(hl.ge.10.0) aform(10)='.1,a'
        if(hl.ge.100.) aform(10)='.0,a'
        if(hl.ge.1000.) then
          aform(9)='',e7'
          aform(10)='.1,a,'
        endif
        write(8,aform) x,y,hl,unit
      else
        write(8,32) x,y
32      format('\put(',f6.2,',',f6.2,'){\tiny stable}')
        go to 55
      endif
      x=x+.04
      y=y-.08
      write(8,40) x,y,idec
40    format('\put(',f6.2,',',f6.2,'){\tiny ',i4'}')
45    if (ibr) then
        xbr1=x+.25
        ybr1=y+.06
        xbr2=x+.1
        ybr2=y+.55
        if(rt.eq.1..and.rt2.eq.1.) then
          xbr1=x+.25
          ybr1=y-.07
          xbr2=x+.12
          ybr2=y+.48
        endif
        if(rt.eq.2..and.rt2.eq.2.) then
          xbr1=x-.17
          ybr1=y-.1
          xbr2=x-.35
          ybr2=y+.5
        endif
        if(rt.eq.1..and.rt2.eq.2.) then
          xbr2=x-.35
          ybr2=y+.06
        endif
        if(rt.eq.1..and.rt2.eq.3.) then
          xbr2=x
          ybr2=y-.11
        endif
        if(rt.eq.2..and.rt2.eq.3.) then
          xbr1=x-.35
```

```
          ybr1=y+.15
          xbr2=x
          ybr2=y-.11
        endif
c       write(8,*)rt,rt2,xbr1,ybr1,x,y,iz,ia
        write(8,50) xbr1,ybr1,br
        write(8,50) xbr2,ybr2,br2
        ibr=.false.
 50     format('\put(',f6.2,',',f6.2,'){\tiny ',f5.4,'}')
      endif
 55   if(jz.eq.999) go to 4
      if(iz.eq.0) go to 60
      if(ic1.eq.jc1.and.ic2.eq.jc2) then
        x=xstart
        y=ystart+.3
        xstart=xstart+.15
        iup=.true.
      else
        xstart=xstart+.6
      endif
60    iz=jz
      ic1=jc1
      ic2=jc2
      ia=ja
      h1=xh1
      bdec=xbdec
      gdec=xgdec
      adec=xadec
      br=xb
      adj=xad
      rt=xt
      go to 12
 1000 stop
      end
      character*1 function ltou(c)
      character*1 lc(26),uc(26),c
      data lc/'a','b','c','d','e','f','g','h','i','j','k','l',
     x 'm','n','o','p','q','r','s','t','u','v','w','x','y','z'/
      data uc/'A','B','C','D','E','F','G','H','I','J','K','L',
     X 'M','N','O','P','Q','R','S','T','U','V','W','X','Y','Z'/
      ltou=' '
      do 10 i=1,26
      if (c.eq.lc(i)) then
          ltou=uc(i)
          return
      endif
 10   continue
      return
      end
```

```
      program rdfp
      logical iup,ibr,ib3
      character*1 ic1,ic2,c,ltou,unit,jc1,jc2,kc1,kc2
      character*4 aform(12)
      data aform/'(''\p','ut(''',',f6.','2,'',',''',f6','.2,''','){\t'
     x ,'iny ',''',f4','.2,a','1,''}',''')'/
c  read fission product file and format nuclide id,z,a, decay energy,
c  half life and branching ratios for tek.
      iup=.false.
      ibr=.false.
      ib3=.false.
      open(unit=1,file='dcy12',status='old',form='formatted')
      open(unit=8,file='output',status='unknown',form='formatted')
  4   read(1,*,end=1000) xbox,ybox
      xstart=xbox+.01
      ystart=ybox+.2
 5    read(1,10,end=1000)iz,ic1,ic2,ia,hl,bdec,gdec,adec,rt,br,adj
 12   read(1,10,end=1000)jz,jc1,jc2,ja,xhl,xbdec,xgdec,xadec,xt,xb,xad
 10   format(6x,i3,x,2a1,x,i3,10x,e11.4,3(x,e11.4),f5.2,17x,e11.4,f5.2)
c  test for branching ratio only
      if(jz.eq.0) then
        br2=xb
        rt2=xt
        ibr=.true.
c  test for branching to two different nuclides
 17     read(1,10,end=1000)kz,kc1,kc2,ka,yhl,ybdec,ygdec,yadec,yt,yb,yad
        if(kz.eq.0) then
          br3=yb
          rt3=yt
          ib3=.true.
          go to 17
        endif
      endif
c  test for second of pair coordinates already set
      if(iup) go to 14
c  test for two states of same nuclide
      if((ic1.eq.jc1.and.ic2.eq.jc2).or.(ibr.and.ic1.eq.kc1.
     x and.ic2.eq.kc2))then
        x=xstart
        y=ystart-0.3
      else
        x=xstart
        y=ystart
      endif
c  test for end of row
      if(iz.eq.999) go to 4
c  look for coordinate adjustment
 14   x=x+adj
c      write(8,*) adj,x,xad,br,xb
      xstart=xstart+adj
c  calculate total decay in kev -- add gamma, beta and alpha decays
      dec=(bdec+gdec+adec)/1000.
      idec=nint(dec)
      unit='s'
c  convert half life to correct units
      if(hl.gt.60.) then
        unit='m'
        hl=hl/60.
      endif
      if(hl.gt.60.) then
        unit='h'
        hl=hl/60.
      endif
```

```
      if(hl.gt.24..and.unit.eq.'h') then
        unit='d'
        hl=hl/24.
      endif
      if(hl.gt.365.2499) then
        unit='a'
        hl=hl/365.25
      endif
      c=ltou(ic1)
      y1=y
      if(iup) y1=y1-.01
      write(8,20) x,y1,ia,iz,c,ic2
 20   format('\put(',f6.2,',',f6.2,'){\tiny $^{',i3,'}_{',i3,'}$'2a1,'}'
     x )
      if(iup) then
         x1=x+.1
         y1=y+.06
         if(ia.ge.100) x1=x1+.05
         write(8,22) x1,y1
 22      format('\put(',f6.2,',',f6.2,'){\ttiny m}')
         iup=.false.
      endif
      x=x+.02
      y=y-.11
      if(hl.ge. 0.) then
        aform(9)='',f4'
        aform(10)='.2,a,'
        if(hl.ge.10.0) aform(10)='.1,a'
        if(hl.ge.100.) aform(10)='.0,a'
        if(hl.ge.1000.) then
          aform(9)='',e7'
          aform(10)='.1,a,'
        endif
        write(8,aform) x,y,hl,unit
      else
        write(8,32) x,y
 32     format('\put(',f6.2,',',f6.2,'){\tiny stable}')
        go to 55
      endif
      x=x+.04
      y=y-.08
      write(8,40) x,y,idec
 40   format('\put(',f6.2,',',f6.2,'){\tiny ',i4'}')
 45   if (ibr) then
        if(.not.ib3) then
c  calculate coordinate for two branching arrows
          xbr1=x+.5
          ybr1=y+.05
          xbr2=x+.2
          ybr2=y+.52
          if(rt.eq.1..and.rt2.eq.1.) then
            xbr1=x+.25
            ybr1=y-.09
            xbr2=x+.12
            ybr2=y+.46
          endif
          if(rt.eq.2..and.rt2.eq.2.) then
            xbr1=x-.17
            ybr1=y-.12
            xbr2=x-.35
            ybr2=y+.48
          endif
          if(rt.eq.1..and.rt2.eq.3.) then
```

```
            xbr2=x
            ybr2=y-.13
          endif
          if(rt.eq.2..and.rt2.eq.3.) then
            xbr1=x-.35
            ybr1=y+.12
            xbr2=x
            ybr2=y-.13
          endif
          if(rt.eq.1..and.rt2.eq.2.) then
          xbr2=x-.7
          ybr2=y+.04
        endif
        if(rt.eq.2..and.rt2.eq.4.) then
          xbr1=x-.6
          ybr1=y+.05
          xbr2=x+.45
          ybr2=y+1.35
         endif
         if(rt.eq.1..and.rt2.eq.4.) then
          xbr1=x+.55
          ybr1=y+.05
          xbr2=x+.4
          ybr2=y+1.11
         endif
         if(rt.eq.4..and.rt2.eq.6.) then
          xbr1=x+.35
          ybr1=y+.31
          xbr2=x+.4
          ybr2=y+1.32
         endif
         if(rt.eq.1..and.rt2.eq.1.5) then
          xbr1=x+.6
          ybr1=y+.05
          xbr2=x+1.05
          ybr2=y+.19
         endif
        else
c  three branchings
          if(rt.eq.1.and.rt2.eq.4..and.rt3.eq.1.4) then
            xbr1=x+.6
            ybr1=y+.05
            xbr2=x+.4
            ybr2=y+1.11
          endif
          if(rt.eq.1.and.rt2.eq.4..and.rt3.eq.6) then
            xbr1=x+.45
            ybr1=y+.18
            xbr2=x+.25
            ybr2=y+.56
            xbr3=x+.07
            ybr3=y+.43
          endif
          if(rt.eq.3.and.rt2.eq.4..and.rt3.eq.6) then
            xbr1=x+.3
            ybr1=y-.04
            xbr2=x+.4
            ybr2=y+.41
            xbr3=x+.07
            ybr3=y+.43
          endif
        endif
        write(8,50) xbr1,ybr1,br
```

```
        write(8,50) xbr2,ybr2,br2
        if(ib3) write(8,50) xbr3,ybr3,br3
 50     format('\put(',f6.2,',',f6.2,'){\tiny ',f5.4,'}')
      endif
 55   if(jz.eq.999) go to 4
      if(iz.eq.0) go to 60
      if((ic1.eq.jc1.and.ic2.eq.jc2).or.(ibr.and.ic1.eq.kc1.
     x and.ic2.eq.kc2))then
        x=xstart-.15
        y=ystart+.15
        xstart=xstart
        ystart=ystart
        iup=.true.
      else
        xstart=xstart+1.2
      endif
 60   if(ibr) then
        iz=kz
        ic1=kc1
        ic2=kc2
        ia=ka
        hl=yhl
        bdec=ybdec
        gdec=ygdec
        adec=yadec
        br=yb
        adj=yad
        ib3=.false.
        ibr=.false.
        rt=yt
      else
        iz=jz
        ic1=jc1
        ic2=jc2
        ia=ja
        hl=xhl
        bdec=xbdec
        gdec=xgdec
        adec=xadec
        br=xb
        adj=xad
        rt=xt
      endif
      if(iz.eq.999) go to 4
      go to 12
 1000 stop
      end
      character*1 function ltou(c)
      character*1 lc(26),uc(26),c
      data lc/'a','b','c','d','e','f','g','h','i','j','k','l',
     x 'm','n','o','p','q','r','s','t','u','v','w','x','y','z'/
      data uc/'A','B','C','D','E','F','G','H','I','J','K','L',
     X 'M','N','O','P','Q','R','S','T','U','V','W','X','Y','Z'/
      ltou=' '
      do 10 i=1,26
      if (c.eq.lc(i)) then
          ltou=uc(i)
          return
      endif
 10   continue
      return
      end
```

```
      program yields
c   a program to read the file YLD and place the ri quanity for
c   u235t in the Textures file.
      character*1 state(12),m,n,g,d
      integer id(12)
      real ri(12)
      data m,n,g,d/'m','n','g','d'/
c   read yield file and format the yields
c   open the file called ylds1 and open a file for the output.
      open(unit=60,file='ylds1',status='old',form='formatted')
      open(unit=90,file='output',status='unknown',form='formatted')
c   read the starting coordinates for each line.
  4   read(60,*,end=1000) xbox,ybox
      if (xbox.eq.0.and.ybox.eq.0) then
        go to 1000
      else
        xstart=xbox+.01
        ystart=ybox+.31
      endif
c   skip a line
        do 15 i=1
        read (60,13,end=1000) dum
c   read the state and z number of each nuclide
c   and store in an array.
  5   read(60,12,end=1000)(id(i),state(i),i=1,12)
 12   format(15x,12(i2,4x,a1,3x))
c   skip 7 lines
      do 15 i=1,7
      read (60,13,end=1000) dum
 13   format (a1)
 15   continue
c   set x and y
      x=xstart
      y=ystart
c   read the ri value and store in array.
      read (60,14,end=1000)(ri(i),i=1,12)
 14   format (13x,12(e8.2,2x))
c   test to see if there is more than one state for each
c   nuclide and adjusting the coordinates.
      do 50 i=1,12
      if (id(i).eq.0) go to 50
      if (state(i).eq.n) then
        x=x-.3
        y=y+.6
        go to 28
      endif
      if (state(i).eq.m) then
        x=x-.15
        y=y+.3
        go to 28
      endif
      if (state(i).eq.g) then
        x=x
        y=y
      endif
      if (state(i).eq.d) then
        goto 50
      endif
c   the x and y coordinates are put into Texture's
c   format.
 28   write (90,30) x,y,ri(i)
 30   format('\put(',f6.2,',',f6.2,'){\tiny '1pe8.2,'}')
      if (state(i).eq.n) then
```

```
          x=x+.3
          y=y-.6
        endif
        if (state(i).eq.m) then
          x=x-.15
          y=y+.3
        endif
        if (state(i).eq.g) then
          x=x
          y=y
        endif
        if (state(i).eq.d) then
          x=x
          y=y
        endif
c   adjusts the starting coordiante for next nuclide
c   in the row.
        if (state(i).eq.n) then
          x=x+.15
          y=y-.45
        endif
        if (state(i).eq.m) then
          x=x+.30
          y=y-.75
        endif
        if ((state(i).eq.g).and.(state(i-1).eq.m)) then
          x=x+.15
          y=y+.15
        endif
        if (state(i).eq.g) then
          x=x+.6
          y=y
        endif
        if (state(i).eq.d) then
          x=x+.6
          y=y
        endif
 50     continue
c   skip 51 lines
        do 60 i=1,50
        read (60,13,end=1000) dum
 60     continue
c   returns to beginning to read coordinates for
c   next line and execute the program for that line.
        go to 4
 1000 stop
        end
```

```
      program yields
c   a program to read the file YLD and place the ri quanity for
c   u235t in the Textures file.
      character*1 state(12),m,n,g,d
      integer id(12)
      real ri(12)
      data m,n,g,d/'m','n','g','d'/
c   read yield file and format the yields
c   open the file called ylds1 and open a file for the output.
      open(unit=60,file='ylds1',status='old',form='formatted')
      open(unit=90,file='output',status='unknown',form='formatted')
c   read the starting coordinates for each line.
  4   read(60,*,end=1000) xbox,ybox
      if (xbox.eq.0.and.ybox.eq.0) then
        go to 1000
      else
        xstart=xbox+.01
        ystart=ybox+.31
      endif
100    read(60,120,end=1000) iz
120    format(21x,i3)
c   read the state and z number of each nuclide
c   and store in an array.
  5   read(60,12,end=1000)(id(i),state(i),i=1,12)
 12   format(15x,12(i2,4x,a1,3x))
c   skip 7 lines
      do 15 i=1,7
      read (60,13,end=1000) dum
 13   format (a1)
 15   continue
c   set x and y
      x=xstart
      y=ystart
c   read the ri value and store in array.
      read (60,14,end=1000)(ri(i),i=1,12)
 14   format (13x,12(e8.2,2x))
c   test to see if there is more than one state for each
c   nuclide and adjusting the coordinates.
      do 50 i=1,12
      if (id(i).eq.0) go to 50
      if (state(i).eq.n) then
        x=x-.3
        y=y+.6
        go to 28
      endif
      if (state(i).eq.m) then
        x=x-.15
        y=y+.3
        go to 28
      endif
      if (state(i).eq.g) then
        x=x
        y=y
      endif
      if (state(i).eq.d) then
        goto 50
      endif
c   the x and y coordinates are put into Texture's
c   format.
 28   write (90,30) iz,id(i),state(i),ri(i)
 30   format(i3,2x,i2,2x,a1,2x,1pe8.2)
      if (state(i).eq.n) then
        x=x+.3
```

```
        y=y-.6
      endif
      if (state(i).eq.m) then
        x=x-.15
        y=y+.3
      endif
      if (state(i).eq.g) then
        x=x
        y=y
      endif
      if (state(i).eq.d) then
        x=x
        y=y
      endif
c   adjusts the starting coordiante for next nuclide
c   in the row.
      if (state(i).eq.n) then
        x=x+.15
        y=y-.45
      endif
      if (state(i).eq.m) then
        x=x+.30
        y=y-.75
      endif
      if ((state(i).eq.g).and.(state(i-1).eq.m)) then
        x=x+.15
        y=y+.15
      endif
      if (state(i).eq.g) then
        x=x+.6
        y=y
      endif
      if (state(i).eq.d) then
        x=x+.6
        y=y
      endif
 50   continue
c   skip 51 lines
      do 60 i=1,50
      read (60,13,end=1000) dum
 60   continue
c   returns to beginning to read coordinates for
c   next line and execute the program for that line.
      go to 4
 1000 stop
      end
```

```
      program dash
      character*2 name(12)
      character*1 state(12), m,n,g,d
      integer iz
      integer ia(12)
      character*7 hl(12)
      data m,n,g,d/'m','n','g','d'/
c     a program to read the file YLD and place the dashed boxes
c     in the Textures file.
c     read yield file and format the yields
c     open the file called ylds1 and open a file for the output.
      open(unit=60,file='ylds1',status='old',form='formatted')
      open(unit=90,file='output',status='unknown',form='formatted')
 4    read (60,*,end=1000) xbox, ybox
      if(xbox.eq.999) go to 1000
c     reading iz in and read ia,name,state, and hl in arrays
 5    read(60,10,end=1000) iz
10    format(21x,i3)
 6    read(60,11,end=1000) (ia(i),name(i),state(i),i=1,12)
11    format(15x,12(i2,1x,a2,1x,a1,3x))
 7    read(60,12,end=1000) (hl(i),i=1,12)
12    format(15x,12(a7,3x))
      xstart= xbox+.01
      ystart= ybox+.2
c     ****************************************************************
c     **********************do loop 1*********************************
      do 17 i=1,12
            if (ia(i).eq.0) go to 17
            if (state(i).eq.n) then
                xstart=xstart-.3
                ystart=ystart+.6
                go to 15
            endif
            if (state(i).eq.m) then
                xstart=xstart-.15
                ystart=ystart+.3
                go to 15
             endif
            if (state(i).eq.g) then
                xstart=xstart
                ystart=ystart

            endif
            if (state(i).eq.d) then
                goto 17
            endif
15    write(90,16,end=1000) xstart,ystart,iz,ia(i),name(i)
16    format('\put(',f6.2,',',f6.2,'){\tiny $^{',i3,'}_{',i2,'}$'a2,'}'
     x )

            if (state(i).eq.n) then
                xstart=xstart+.3
                ystart=ystart-.6
            endif
            if (state(i).eq.m) then
                xstart=xstart-.45
                ystart=ystart+.3
            endif
            if (state(i).eq.g) then
                xstart=xstart
                ystart=ystart
            endif
            if (state(i).eq.d) then
```

```
                xstart=xstart
                ystart=ystart
            endif
c   adjusts the starting coordiante for next nuclide
c   in the row.
            if (state(i).eq.n) then
                xstart=xstart+.15
                ystart=ystart-.45
            endif
            if (state(i).eq.m) then
                xstart=xstart+.6
                ystart=ystart-.75
            endif
            if ((state(i).eq.g).and.(state(i-1).eq.m)) then
                xstart=xstart+.6
                ystart=ystart+.15
            elseif (state(i).eq.g) then
                xstart=xstart+.6
                ystart=ystart
            endif
            if (state(i).eq.d) then
                xstart=xstart+.6
                ystart=ystart
            endif
17      continue
c   ****************************************************************
c   ****************************************************************
      xhl=xbox+.02
      yhl=ybox+.09
c   ****************************************************************
c   ***************************do loop 2****************************
      do 20 i=1,12
            if (ia(i).eq.0) go to 20
            if (state(i).eq.n) then
                xhl=xhl-.3
                yhl=yhl+.6
                go to 18
            endif
            if (state(i).eq.m) then
                xhl=xhl-.15
                yhl=yhl+.3
                go to 18
             endif
            if (state(i).eq.g) then
                xhl=xhl
                yhl=yhl
            endif
            if (state(i).eq.d) then
                goto 20
            endif
18      write(90,19) xhl,yhl,hl(i)
19      format('\put(',f6.2,',',f6.2,'){\tiny ',a7,'}'
     x )
            if (state(i).eq.n) then
                xhl=xhl+.3
                yhl=yhl-.6
            endif
            if (state(i).eq.m) then
                xhl=xhl-.45
                yhl=yhl+.3
            endif
            if (state(i).eq.g) then
                xhl=xhl
```

```
                yhl=yhl
            endif
            if (state(i).eq.d) then
                xhl=xhl
                yhl=yhl
            endif
c   adjusts the starting coordiante for next nuclide
c   in the row.
            if (state(i).eq.n) then
                xhl=xhl+.15
                yhl=yhl-.45
            endif
            if (state(i).eq.m) then
                xhl=xhl+.6
                yhl=yhl-.75
            endif
            if ((state(i).eq.g).and.(state(i-1).eq.m)) then
                xhl=xhl+.6
                yhl=yhl+.15
            elseif (state(i).eq.g) then
                xhl=xhl+.6
                yhl=yhl
            endif
            if (state(i).eq.d) then
                xhl=xhl+.6
                yhl=yhl
            endif
20      continue
c   ****************************************************************
c   ****************************************************************
c
c   skip 57 lines
        do 14 i= 1,57
        read (60,13,end=1000) dum
 13     format (a1)
 14     continue
      go to 4
1000  end
```

```
      program energy
       character*2 name
       character*3 iz,ia
       character*1 state
       real adec, gdec, bdec, dec
       open(unit=1,file='dcyf',status='old',form='formatted')
       open(unit=8,file='output',status='unknown',form='formatted')
  5    read(1,10,end=1000)iz,name,ia,state,bdec,gdec,adec
 10    format(6x,a3,x,a2,x,a3,1x,a1,20x,3(x,e11.4))
c  calculate total decay in kev -- add gamma, beta and alpha decays
       dec=(bdec+gdec+adec)/1000.
       idec=nint(dec)
       write(8,20,end=1000) iz,name,ia,state,bdec,gdec,adec,idec,dec
 20    format(5x,a3,5x,a2,5x,a3,2x,a1,5x,3(1pe11.4,5x),10x,i6,5x,1pe11.4)
       goto 5
1000   end
```

```
      program halflife
      character*2 name
      character*3 iz,ia
      character*1 state
      character*1 unit
      open(unit=1,file='dcyf',status='old',form='formatted')
      open(unit=8,file='output',status='unknown',form='formatted')
  5   read(1,10,end=1000)iz,name,ia,state,hl
 10   format(6x,a3,x,a2,x,a3,1x,a1,8x,e11.4)
      unit='s'
c  convert half life to correct units
      if(hl.gt.60.) then
        unit='m'
        hl=hl/60.
      endif
      if(hl.gt.60.) then
        unit='h'
        hl=hl/60.
      endif
      if(hl.gt.24..and.unit.eq.'h') then
        unit='d'
        hl=hl/24.
      endif
      if(hl.gt.365.2499) then
        unit='a'
        hl=hl/365.25
      endif
 15   write(8,20,end=1000) iz,name,ia,state,hl,unit
 20   format(a3,2x,a2,2x,a3,1x,a1,5x,f15.2,1x,a1)
      goto 5
1000  end
```

jefprog  12 lines

```
 1 #!/bin/sh
 2 sed 's/}_/ }_/g
 3    s/\^{/\^{ /g
 4    s/_{/_{ /g
 5    s/}\$/ }\$/g' $1 >jeftemp
 6 mv jeftemp $1
 7 awk '/\$/{printf("%s\n%s\n%s\n%s\n",$9,$7,$2,$4)}
 8    END {print "0"}' $1 | jefprog1.x
 9 cat totnot notfound > jeftemp
10 mv jeftemp totnot
11 cat totmeta meta > jeftemp
12 mv jeftemp totmeta
```

jefprog1.f  77 lines

```
 1    program jefprog1
 2    integer jefa(3500), jefz(3500), nucnum, i, jefdcy(3500)
 3    integer dcy(3), howmany
 4    integer a, z
 5    real newx, newy, x, y
 6    logical found
 7    common /jef/jefa,jefz, jefdcy
 8    open (unit=1, file='jefdec2',status='old',form='formatted')
 9    open (unit=12, file='notfound', status='unknown')
10    open (unit=25, file='meta', status='unknown')
11    do 100 i=1,3500
12    read (1,200, end=400) jefz(i), jefa(i), jefdcy(i)
13 200        format (5x,i3,12x,i3,66x,i7)
14 100        continue
15 400        continue
16    nucnum=i-1
17 60 continue
18    read (*,450) z
19 450        format (i3)
20    if (z.eq.0) then
21            goto 75
22    endif
23    read (*,500)a,x,y
24 500        format (i3,1/,f6.3,1/,f6.3)
25    call lookup(z,a,dcy, nucnum, found,howmany)
26    newx=x+.06
27    newy=y-.19
28    if (howmany.eq.1) then
29            write (*,600) newx,newy,dcy(1)
30 600        format('\put(',f6.3,',',f6.3,'){\tiny',i6'}')
31    else
32     if (howmany.gt.1) then
33                  do 80 i=1,howmany
34                  write (25,90) i, z, a, newx, newy, dcy(i)
35 90 format(i1,3x,i3,3x,i3,3x,'\put(',f6.3,',',f6.3,'){\tiny'i6'}')
36 80 continue
37            endif
38    endif
39    goto 60
40 75         continue
41    end
```

```
42     subroutine lookup (z,a,dcy,nucnum, found,howmany)
43     integer z,a,howmany
44     integer dcy(3), jefa(3500), jefz(3500), jefdcy(3500), nucnum, i
45     logical found, zfound
46     common /jef/jefa,jefz,jefdcy
47     zfound = .false.
48     found= .false.
49     howmany=0
50  c  print *, a,"  ",z
51     do 1000 i = 1, nucnum
52  c  if (zfound) print *,jefz(i),"  ",jefa(i),"    ",i
53             if (jefz(i).eq.z) then
54  c  print *,"a=",jefa(i),"z=",jefz(i),"dcy=",jefdcy(i)
55                     zfound= .true.
56                     if(jefa(i).eq.a) then
57                             dcy(1)=jefdcy(i)
58                             found=.true.
59     howmany=1
60     if((jefz(i+1).eq.z).and.(jefa(i+1).eq.a))then
61             dcy(2)=jefdcy(i+1)
62             howmany=2
63     if((jefz(i+2).eq.z).and.(jefa(i+2).eq.a))then
64             dcy(3)=jefdcy(i+2)
65             howmany=3
66     endif
67     endif
68                             goto 1100
69                     endif
70             else
71                     if (zfound) goto 1200
72             endif
73  1000       continue
74  1200       write (12,1300) z, a
75  1300       format (1x, i3, 5x,i3)
76  1100       continue
77     end
```

# ENDF/B-VI Decay Chains

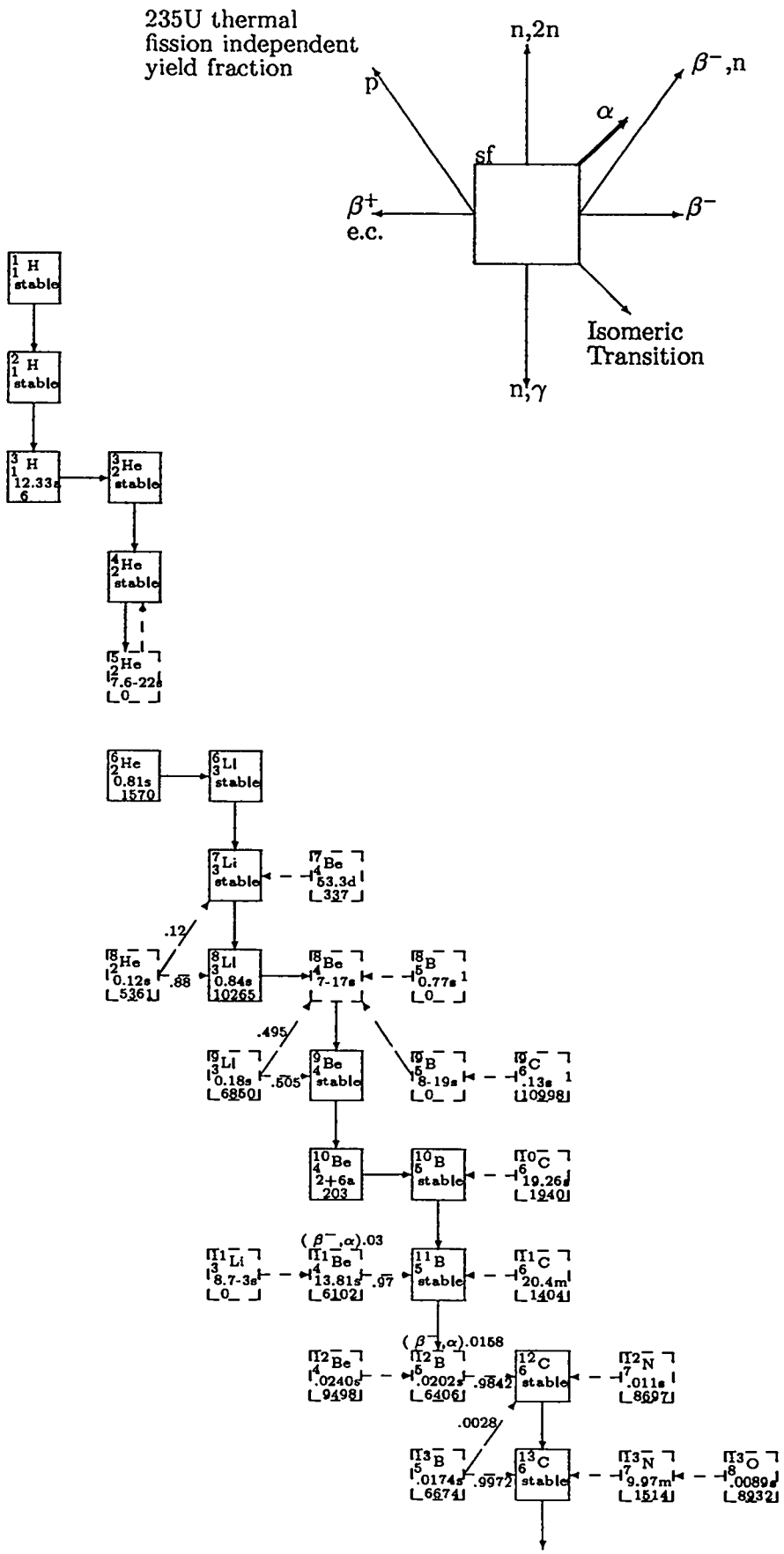
235U thermal
fission independent
yield fraction
n,2n
p
β⁻,n
α
sf
β+
e.c.
β⁻
Isomeric
Transition
n,γ
1 H 1 stable
2 H 1 stable
3 H 1 12.33a 6
3He 2 stable
4He 2 stable
5He 2 7.6-22s 0
6He 2 0.81s 1570
6Li 3 stable
7Li 3 stable
7Be 4 53.3d 337
.12
.88
8He 2 0.12s 5361
8Li 3 0.84s 10265
8Be 4 7-17s
8B 5 0.77s 1 0
.495
.505
9Li 3 0.18s 6850
9Be 4 stable
9B 5 8-19s 0
9C 6 .13s 1 10998
10Be 4 2+6a 203
10B 5 stable
10C 6 19.26s 1240
(β⁻,α).03
11Li 3 8.7-3s 0
11Be 4 13.81s 6102
.97
11B 5 stable
11C 6 20.4m 1404
(β⁻,α).0158
12Be 4 .0240s 9498
12B 5 .0202s 6406
.9842
12C 6 stable
12N 7 .011s 8697
.0028
13B 5 .0174s 6674
.9972
13C 6 stable
13N 7 9.97m 1514
13O 8 .0089s 8932

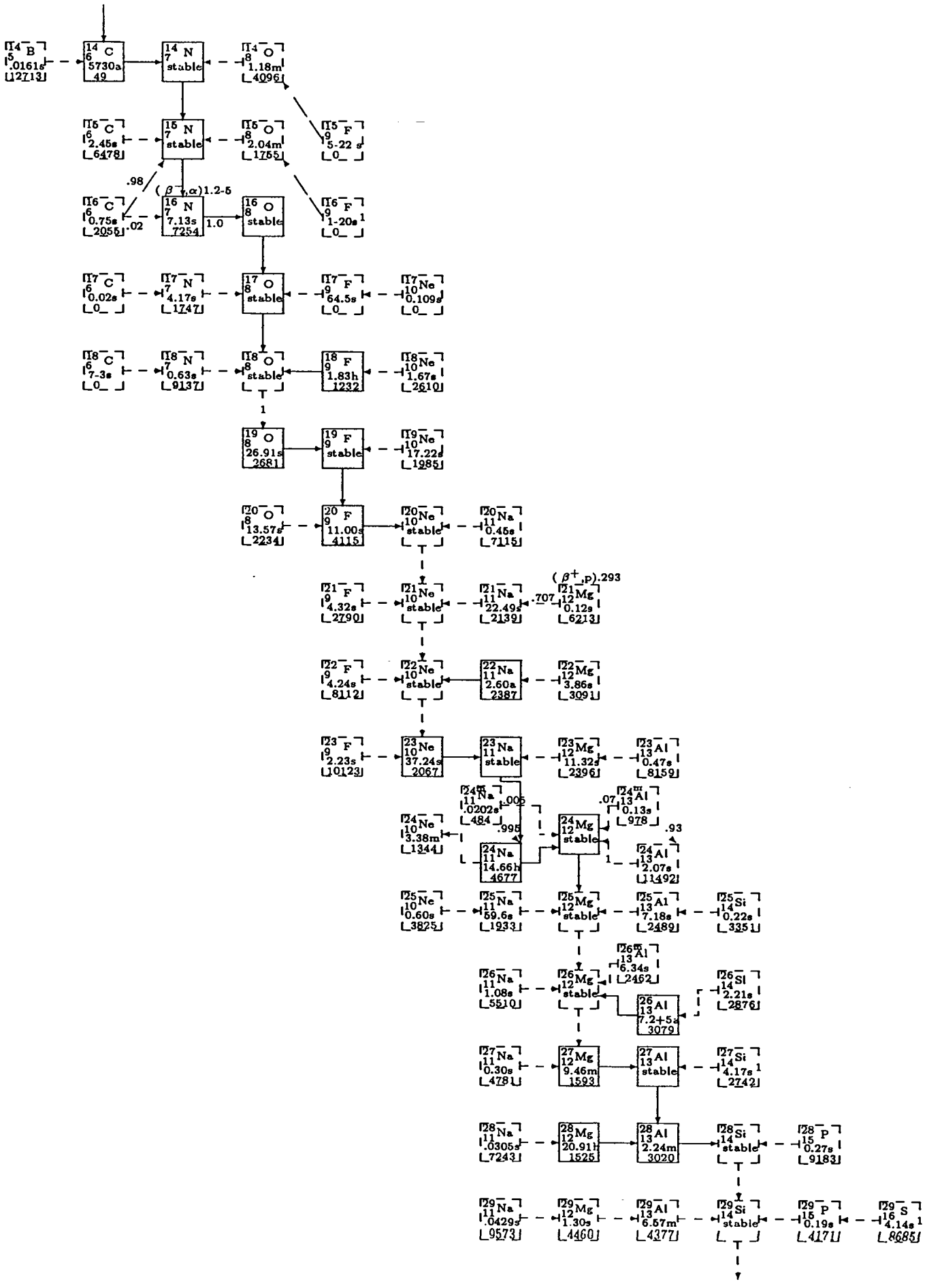
14 B 5 .0161s 2713
14 C 6 5730a 49
14 N 7 stable
14 O 8 1.18m 4096
15 C 6 2.45s 6478
15 N 7 stable
15 O 8 2.04m 1755
15 F 9 5-22 s 0
.98
(β+,α)1.2-5
16 C 6 0.75s 2055
.02
16 N 7 7.13s 7254
1.0
16 O 8 stable
16 F 9 1-20s 1 0
17 C 6 0.02s 0
17 N 7 4.17s 1747
17 O 8 stable
17 F 9 64.5s 0
17 Ne 10 0.109s 0
18 C 6 7-3s 0
18 N 7 0.63s 9137
18 O 8 stable
18 F 9 1.83h 1232
18 Ne 10 1.67s 2610
1
19 O 8 26.91s 2681
19 F 9 stable
19 Ne 10 17.22s 1985
20 O 8 13.57s 2234
20 F 9 11.00s 4115
20 Ne 10 stable
20 Na 11 0.45s 7115
(β+,p).293
21 F 9 4.32s 2790
21 Ne 10 stable
21 Na 11 22.49s 2139
.707
21 Mg 12 0.12s 6213
22 F 9 4.24s 8112
22 Ne 10 stable
22 Na 11 2.60a 2387
22 Mg 12 3.86s 3091
23 F 9 2.23s 10123
23 Ne 10 37.24s 2067
23 Na 11 stable
23 Mg 12 11.32s 2396
23 Al 13 0.47s 8159
24m Na 11 .0202s 484
.005
.995
24 Ne 10 3.38m 1344
24 Na 11 14.66h 4677
24 Mg 12 stable
24m Al 13 .07 0.13s 978
.93
1
24 Al 13 2.07s 1492
25 Ne 10 0.60s 3825
25 Na 11 59.6s 1933
25 Mg 12 stable
25 Al 13 7.18s 2489
25 Si 14 0.22s 3351
26m Al 13 6.34s 2462
26 Na 11 1.08s 5510
26 Mg 12 stable
26 Al 13 7.2+5a 3079
26 Si 14 2.21s 2876
27 Na 11 0.30s 4781
27 Mg 12 9.46m 1593
27 Al 13 stable
27 Si 14 4.17s 1 2742
28 Na 11 .0305s 7243
28 Mg 12 20.91h 1525
28 Al 13 2.24m 3020
28 Si 14 stable
28 P 15 0.27s 9183
29 Na 11 .0429s 9573
29 Mg 12 1.30s 4460
29 Al 13 6.57m 4377
29 Si 14 stable
29 P 15 0.19s 4171
29 S 16 4.14s 1 8685

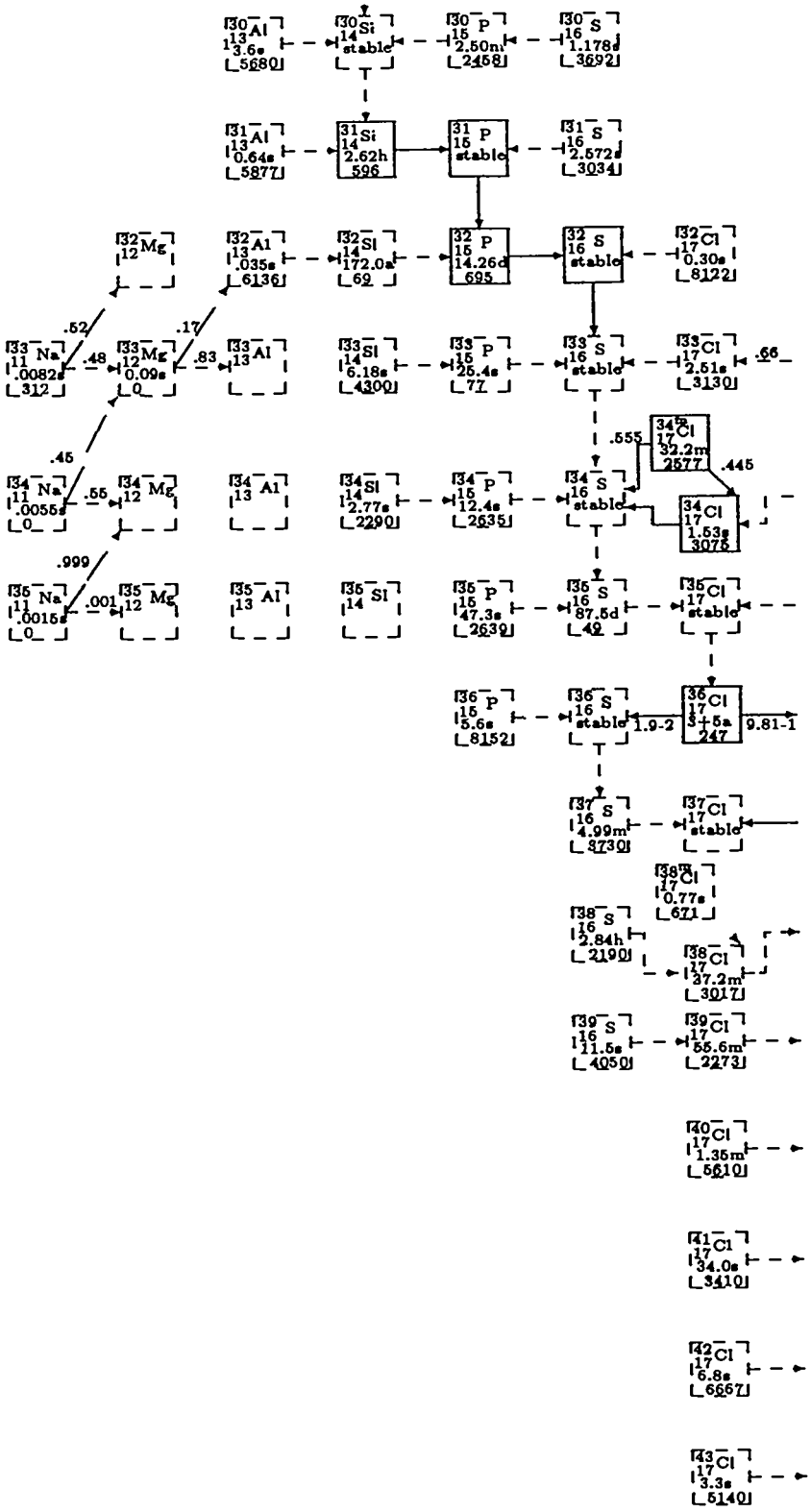
30 Al 13 3.6s 5680
30 Si 14 stable
30 P 15 2.50m 2458
30 S 16 1.178s 3692
31 Al 13 0.64s 5877
31 Si 14 2.62h 596
31 P 15 stable
31 S 16 2.572s 3034
32 Mg 12
32 Al 13 .035s 6136
32 Si 14 172.0s 69
32 P 15 14.26d 695
32 S 16 stable
32 Cl 17 0.30s 8122
.52
.17
33 Na 11 .0082s 312
.48
33 Mg 12 0.09s 0
.83
33 Al 13
33 Si 14 6.18s 4300
33 P 15 25.4s 77
33 S 16 stable
33 Cl 17 2.51s 3130
.66
.555
34 Cl 17 32.2m 2577
.445
.45
34 Na 11 .0055s 0
.55
34 Mg 12
34 Al 13
34 Si 14 2.77s 2290
34 P 15 12.4s 2635
34 S 16 stable
34 Cl 17 1.53s 3075
.999
35 Na 11 .0015s 0
.001
35 Mg 12
35 Al 13
35 Si 14
35 P 15 47.3s 2639
35 S 16 87.5d 49
35 Cl 17 stable
36 P 15 5.6s 8152
36 S 16 stable
1.9-2
36 Cl 17 3+ 5a 247
9.81-1
37 S 16 4.99m 8730
37 Cl 17 stable
38m Cl 17 0.77s 671
38 S 16 2.84h 2190
38 Cl 17 37.2m 3017
39 S 16 11.5s 4050
39 Cl 17 55.6m 2273
40 Cl 17 1.35m 5610
41 Cl 17 34.0s 3410
42 Cl 17 6.8s 6667
43 Cl 17 3.3s 5140

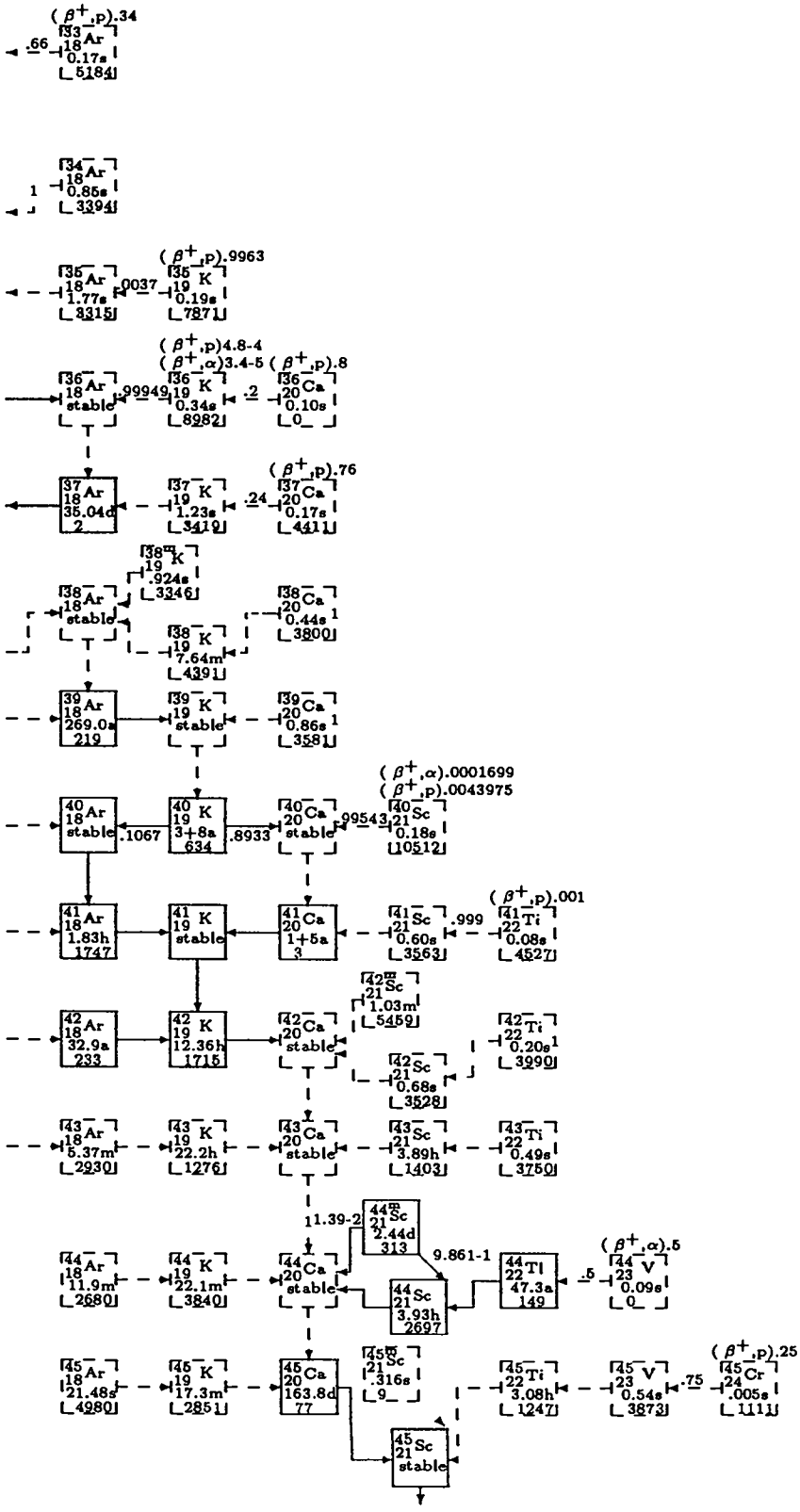
(β+,p).34
.66
33 Ar 18 0.17s 5184
1
34 Ar 18 0.85s 3394
(β+,p).9963
.0037
35 Ar 18 1.77s 3315
35 K 19 0.19s 7871
(β+,p)4.8-4
(β+,α)3.4-5
(β+,p).8
.99949
.2
36 Ar 18 stable
36 K 19 0.34s 8982
36 Ca 20 0.10s 0
(β+,p).76
37 Ar 18 35.04d 2
37 K 19 1.23s 3419
.24
37 Ca 20 0.17s 441
38m K 19 .924s 3346
38 Ar 18 stable
38 K 19 7.64m 4391
38 Ca 20 0.44s 3800
39 Ar 18 269.0a 219
39 K 19 stable
39 Ca 20 0.86s 358
(β+,α).0001699
(β+,p).0043975
40 Ar 18 stable
.1067
40 K 19 3+8a 634
.8933
40 Ca 20 stable
.99543
40 Sc 21 0.18s 10512
41 Ar 18 1.83h 1747
41 K 19 stable
41 Ca 20 1+5a 3
41 Sc 21 0.60s 3563
.999
(β+,p).001
41 Ti 22 0.08s 4527
42m Sc 21 1.03m 5459
42 Ar 18 32.9a 233
42 K 19 12.36h 1715
42 Ca 20 stable
42 Sc 21 0.68s 3528
42 Ti 22 0.20s 3990
43 Ar 18 5.37m 2930
43 K 19 22.2h 1276
43 Ca 20 stable
43 Sc 21 3.89h 1403
43 Ti 22 0.49s 3750
11.39-2
44m Sc 21 2.44d 313
9.861-1
44 Ar 18 11.9m 2680
44 K 19 22.1m 3840
44 Ca 20 stable
44 Sc 21 3.93h 2697
44 Ti 22 47.3a 149
.5
(β+,α).5
44 V 23 0.09s 0
45 Ar 18 21.48s 4980
45 K 19 17.3m 2851
45 Ca 20 163.8d 77
45m Sc 21 .316s 9
45 Ti 22 3.08h 1247
45 V 23 0.54s 3873
.75
(β+,p).25
45 Cr 24 .005s 1111
45 Sc 21 stable

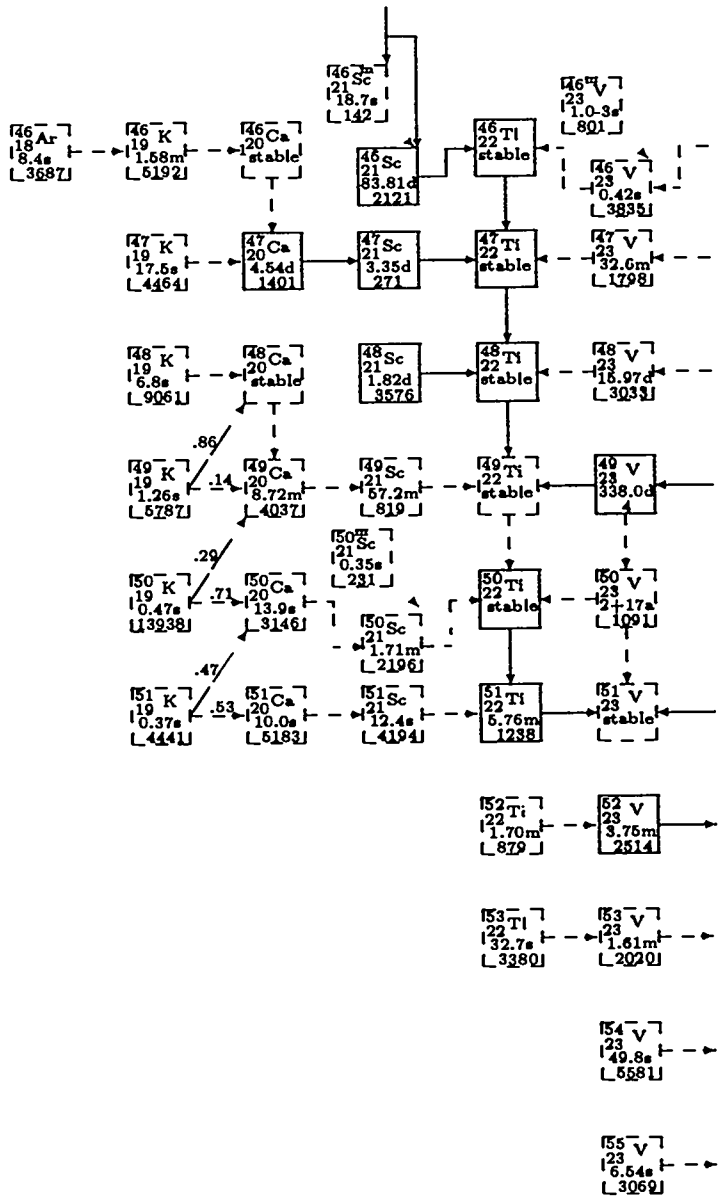
46 Ar 18 8.4s 3687
46 K 19 1.68m 5192
46 Ca 20 stable
46m Sc 21 18.7s 142
46 Sc 21 83.81d 2121
46 Ti 22 stable
46m V 23 1.0-3s 801
46 V 23 0.42s 3835
47 K 19 17.5s 4464
47 Ca 20 4.54d 1401
47 Sc 21 3.35d 271
47 Ti 22 stable
47 V 23 32.6m 1798
48 K 19 6.8s 9061
48 Ca 20 stable
48 Sc 21 1.82d 3576
48 Ti 22 stable
48 V 23 16.97d 3033
.86
.14
49 K 19 1.26s 5787
49 Ca 20 8.72m 4037
49 Sc 21 57.2m 819
49 Ti 22 stable
49 V 23 338.0d
.29
.71
50m Sc 21 0.35s 231
50 K 19 0.47s 3938
50 Ca 20 13.9s 3146
50 Sc 21 1.71m 2196
50 Ti 22 stable
50 V 23 2+17a 109
.47
.53
51 K 19 0.37s 4441
51 Ca 20 10.0s 5183
51 Sc 21 12.4s 4194
51 Ti 22 5.76m 1238
51 V 23 stable
52 Ti 22 1.70m 879
52 V 23 3.75m 2514
53 Ti 22 32.7s 3380
53 V 23 1.61m 2020
54 V 23 49.8s 5581
55 V 23 6.54s 3069

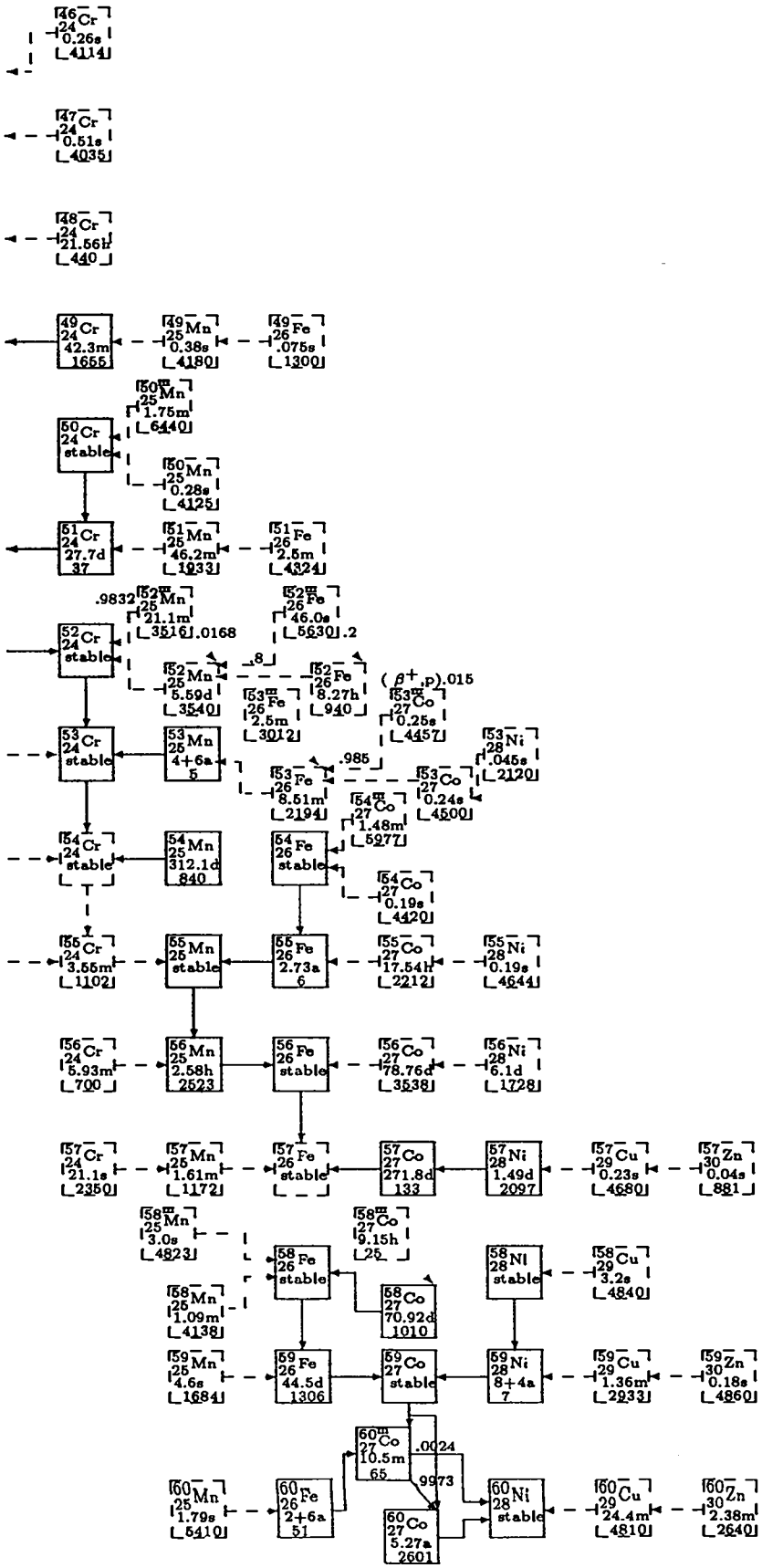
46Cr 24 0.26s [4114]
47Cr 24 0.51s [4035]
48Cr 24 21.56h [440]
49Cr 24 42.3m 1655
49Mn 25 0.38s [4180]
49Fe 26 .075s [1300]
50mMn 25 1.75m [6440]
50Cr 24 stable
50Mn 25 0.28s [4125]
51Cr 24 27.7d 37
51Mn 25 46.2m [1933]
51Fe 26 2.5m [4324]
.9832
52mMn 25 21.1m [3516] .0168
52mFe 26 46.0s [5630] .2
52Cr 24 stable
52Mn 25 5.59d [3540]
.8
52Fe 26 8.27h [940]
(β+,p).015
53mFe 26 2.5m [3012]
53mCo 27 0.25s [4457]
53Ni 28 .045s [2120]
53Cr 24 stable
53Mn 25 4+6a 5
.985
53Fe 26 8.51m [2194]
53Co 27 0.24s [4500]
54mCo 27 1.48m [5977]
54Cr 24 stable
54Mn 25 312.1d 840
54Fe 26 stable
54Co 27 0.19s [4420]
55Cr 24 3.55m [1102]
55Mn 25 stable
55Fe 26 2.73a 6
55Co 27 17.54h [2212]
55Ni 28 0.19s [4644]
56Cr 24 5.93m [700]
56Mn 25 2.58h 2523
56Fe 26 stable
56Co 27 78.76d [3538]
56Ni 28 6.1d [1728]
57Cr 24 21.1s [2350]
57Mn 25 1.61m [1172]
57Fe 26 stable
57Co 27 271.8d 133
57Ni 28 1.49d 2097
57Cu 29 0.23s [4680]
57Zn 30 0.04s [881]
58mMn 25 3.0s [4823]
58mCo 27 9.15h 25
58Fe 26 stable
58Ni 28 stable
58Cu 29 3.2s [4840]
58Mn 25 1.09m [4138]
58Co 27 70.92d 1010
59Mn 25 4.6s [1684]
59Fe 26 44.5d 1306
59Co 27 stable
59Ni 28 8+4a 7
59Cu 29 1.36m [2933]
59Zn 30 0.18s [4860]
60mCo 27 10.5m 65
.0024
.9973
60Mn 25 1.79s [5410]
60Fe 26 2+6a 51
60Co 27 5.27a 2601
60Ni 28 stable
60Cu 29 24.4m [4810]
60Zn 30 2.38m [2640]

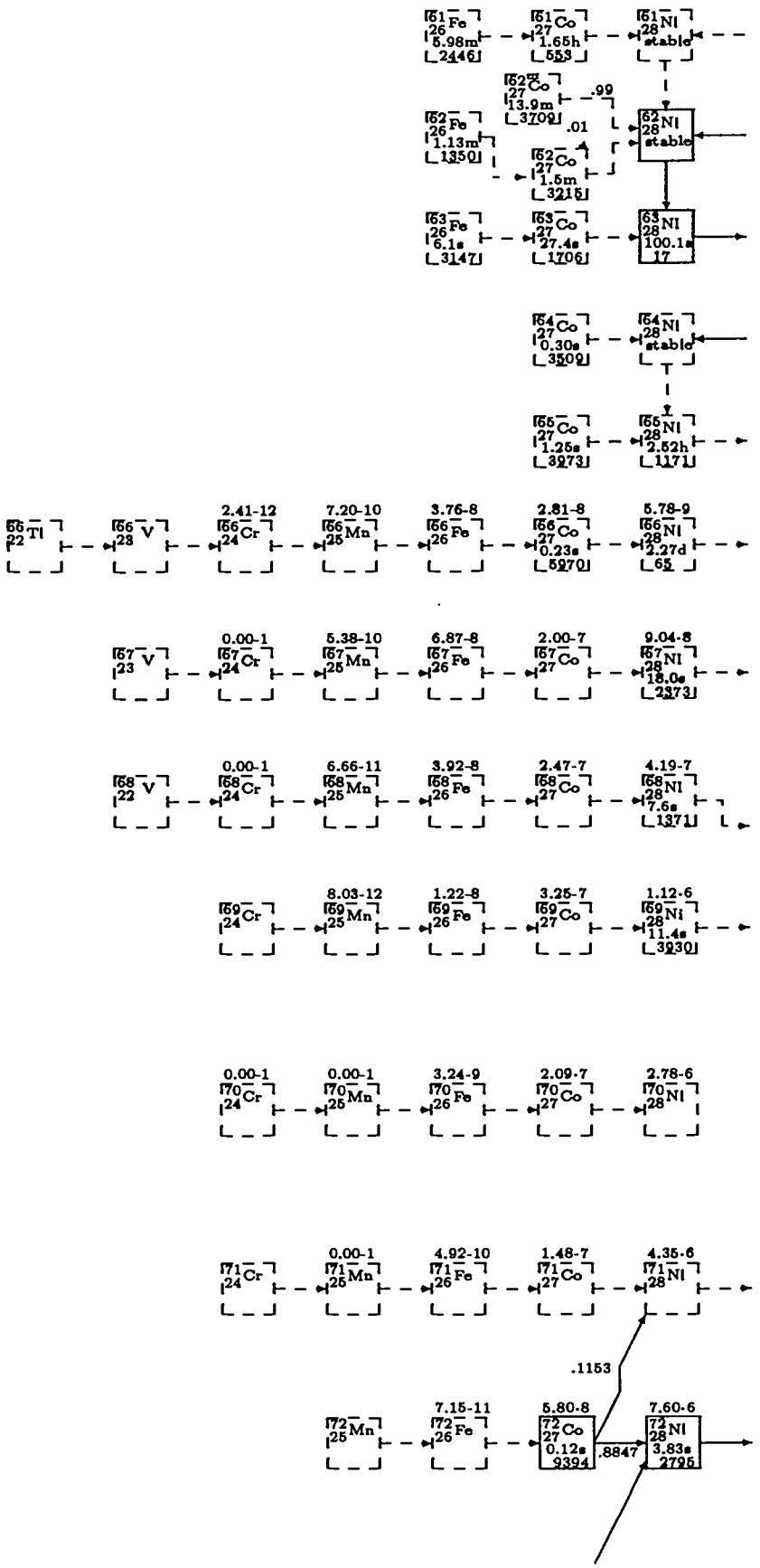
51Fe 26 5.98m 2446
51Co 27 1.65h 553
51Ni 28 stable
52mCo 27 13.9m 3709
.99
.01
52Fe 26 1.13m 1350
52Co 27 1.5m 3215
52Ni 28 stable
53Fe 26 6.1s 3147
53Co 27 27.4s 1706
53Ni 28 100.1s 17
54Co 27 0.30s 3509
54Ni 28 stable
55Co 27 1.25s 3273
55Ni 28 2.52h 1171
56Tl 22
56V 23
2.41-12
56Cr 24
7.20-10
56Mn 25
3.76-8
56Fe 26
2.81-8
56Co 27 0.23s 5270
5.78-9
56Ni 28 2.27d 65
57V 23
0.00-1
57Cr 24
5.38-10
57Mn 25
6.87-8
57Fe 26
2.00-7
57Co 27
9.04-8
57Ni 28 18.0s 2373
58V 22
0.00-1
58Cr 24
6.66-11
58Mn 25
3.92-8
58Fe 26
2.47-7
58Co 27
4.19-7
58Ni 28 7.6s 1371
59Cr 24
8.03-12
59Mn 25
1.22-8
59Fe 26
3.25-7
59Co 27
1.12-6
59Ni 28 11.4s 3230
70Cr 24
0.00-1
70Mn 25
0.00-1
70Fe 26
3.24-9
70Co 27
2.09-7
70Ni 28
2.78-6
71Cr 24
0.00-1
71Mn 25
4.92-10
71Fe 26
1.48-7
71Co 27
4.35-6
71Ni 28
.1153
72Mn 25
7.15-11
72Fe 26
5.80-8
72Co 27 0.12s 9394
.8847
7.60-6
72Ni 28 3.83s 2795

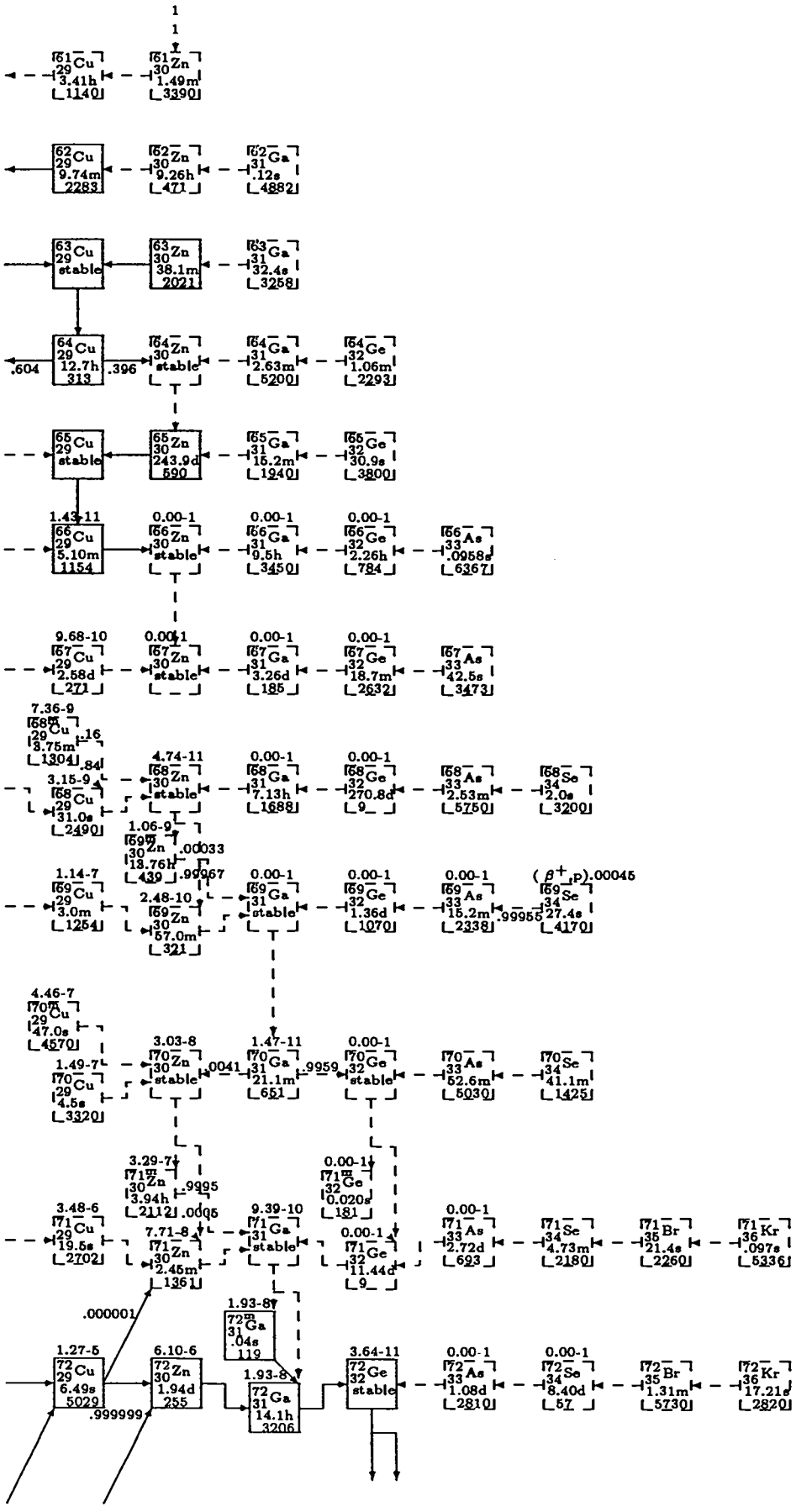
1
1
61 Cu 29 3.41h 1140
61 Zn 30 1.49m 3390
62 Cu 29 9.74m 2283
62 Zn 30 9.26h 471
62 Ga 31 .12s 4882
63 Cu 29 stable
63 Zn 30 38.1m 2021
63 Ga 31 32.4s 3258
64 Cu 29 12.7h 313
.604
.396
64 Zn 30 stable
64 Ga 31 2.63m 5200
64 Ge 32 1.06m 2293
65 Cu 29 stable
65 Zn 30 243.9d 590
65 Ga 31 15.2m 1940
65 Ge 32 30.9s 3800
1.43-11
66 Cu 29 5.10m 1154
0.00-1
66 Zn 30 stable
66 Ga 31 0.5h 3450
66 Ge 32 2.26h 784
66 As 33 .0958s 6367
9.68-10
67 Cu 29 2.58d 271
0.00-1
67 Zn 30 stable
67 Ga 31 3.26d 185
67 Ge 32 18.7m 2632
67 As 33 42.5s 3473
7.36-9
68m Cu 29 3.75m 1304
.16
.84
3.15-9
68 Cu 29 31.0s 2490
4.74-11
68 Zn 30 stable
68 Ga 31 7.13h 1688
68 Ge 32 270.8d 9
68 As 33 2.53m 5750
68 Se 34 2.0s 3200
1.06-9
69m Zn 30 13.76h 439
.00033
.99967
1.14-7
69 Cu 29 3.0m 1254
2.48-10
69 Zn 30 57.0m 321
0.00-1
69 Ga 31 stable
69 Ge 32 1.36d 1070
69 As 33 15.2m 2338
.99955
(β+,p).00045
69 Se 34 27.4s 4170
4.46-7
70m Cu 29 47.0s 4570
1.49-7
70 Cu 29 4.5s 3320
3.03-8
70 Zn 30 stable
.0041
1.47-11
70 Ga 31 21.1m 651
.9959
0.00-1
70 Ge 32 stable
70 As 33 52.6m 5030
70 Se 34 41.1m 1425
3.29-7
71m Zn 30 3.94h 2112
.9995
.0005
0.00-1
71m Ge 32 0.020s 181
3.48-6
71 Cu 29 19.5s 2702
7.71-8
71 Zn 30 2.45m 1361
9.39-10
71 Ga 31 stable
0.00-1
71 Ge 32 11.44d 9
0.00-1
71 As 33 2.72d 693
71 Se 34 4.73m 2180
71 Br 35 21.4s 2260
71 Kr 36 .097s 5336
.000001
1.93-8?
72m Ga 31 .04s 119
1.27-5
72 Cu 29 6.49s 5029
6.10-6
72 Zn 30 1.94d 255
.999999
1.93-8
72 Ga 31 14.1h 3206
3.64-11
72 Ge 32 stable
0.00-1
72 As 33 1.08d 2810
0.00-1
72 Se 34 8.40d 57
72 Br 35 1.31m 5730
72 Kr 36 17.21s 2820

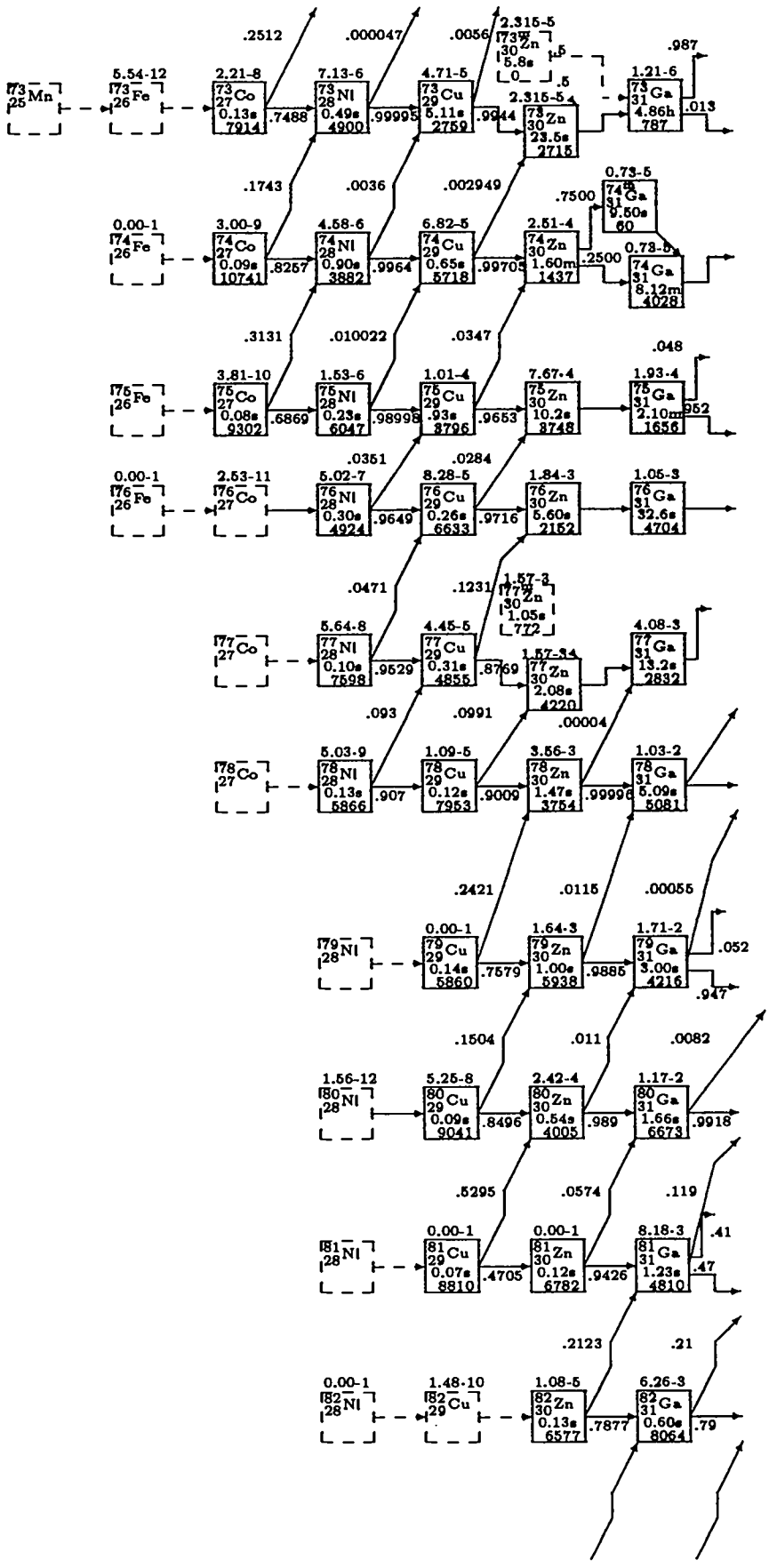
73 25 Mn
5.54-12
73 26 Fe
2.21-8
73 27 Co
0.13s
7914
.7488
.2512
7.13-6
73 28 Ni
0.49s
4900
.99995
.000047
4.71-5
73 29 Cu
5.11s
2759
.9944
.0056
2.315-5
73 30 Zn
5.8s
0
.5
.5
2.315-5
73 30 Zn
23.5s
2715
.987
1.21-6
73 31 Ga
4.86h
787
.013
0.00-1
74 26 Fe
.1743
.0036
.002949
3.00-9
74 27 Co
0.09s
10741
.8257
4.58-6
74 28 Ni
0.90s
3882
.9964
6.82-5
74 29 Cu
0.65s
5718
.99705
2.51-4
74 30 Zn
1.60m
1437
.7500
.2500
0.73-5
74 31 Ga
9.50s
60
0.73-5
74 31 Ga
8.12m
4028
75 26 Fe
.3131
.010022
.0347
3.81-10
75 27 Co
0.08s
9302
.6869
1.53-6
75 28 Ni
0.23s
6047
.98998
1.01-4
75 29 Cu
.93s
3796
.9653
7.67-4
75 30 Zn
10.2s
8748
.048
1.93-4
75 31 Ga
2.10m
1656
.952
0.00-1
76 26 Fe
76 27 Co
.0351
.0284
2.53-11
5.02-7
76 28 Ni
0.30s
4924
.9649
8.28-5
76 29 Cu
0.26s
6633
.9716
1.84-3
76 30 Zn
5.60s
2152
1.05-3
76 31 Ga
32.6s
4704
.0471
.1231
1.57-3
77 30 Zn
1.05s
772
77 27 Co
5.64-8
77 28 Ni
0.10s
7698
.9529
4.45-5
77 29 Cu
0.31s
4855
.8769
1.57-34
77 30 Zn
2.08s
4220
4.08-3
77 31 Ga
13.2s
2832
.093
.0991
.00004
78 27 Co
5.03-9
78 28 Ni
0.13s
5866
.907
1.09-5
78 29 Cu
0.12s
7953
.9009
3.56-3
78 30 Zn
1.47s
3754
.99996
1.03-2
78 31 Ga
5.09s
5081
.2421
.0115
.00055
79 28 Ni
0.00-1
79 29 Cu
0.14s
5860
.7579
1.64-3
79 30 Zn
1.00s
5938
.9885
1.71-2
79 31 Ga
3.00s
4216
.052
.947
.1504
.011
.0082
1.56-12
80 28 Ni
5.25-8
80 29 Cu
0.09s
9041
.8496
2.42-4
80 30 Zn
0.54s
4005
.989
1.17-2
80 31 Ga
1.66s
6673
.9918
.5295
.0574
.119
81 28 Ni
0.00-1
81 29 Cu
0.07s
8810
.4705
0.00-1
81 30 Zn
0.12s
6782
.9426
8.18-3
81 31 Ga
1.23s
4810
.41
.47
.2123
.21
0.00-1
82 28 Ni
1.48-10
82 29 Cu
1.08-5
82 30 Zn
0.13s
6577
.7877
6.26-3
82 31 Ga
0.60s
8064
.79

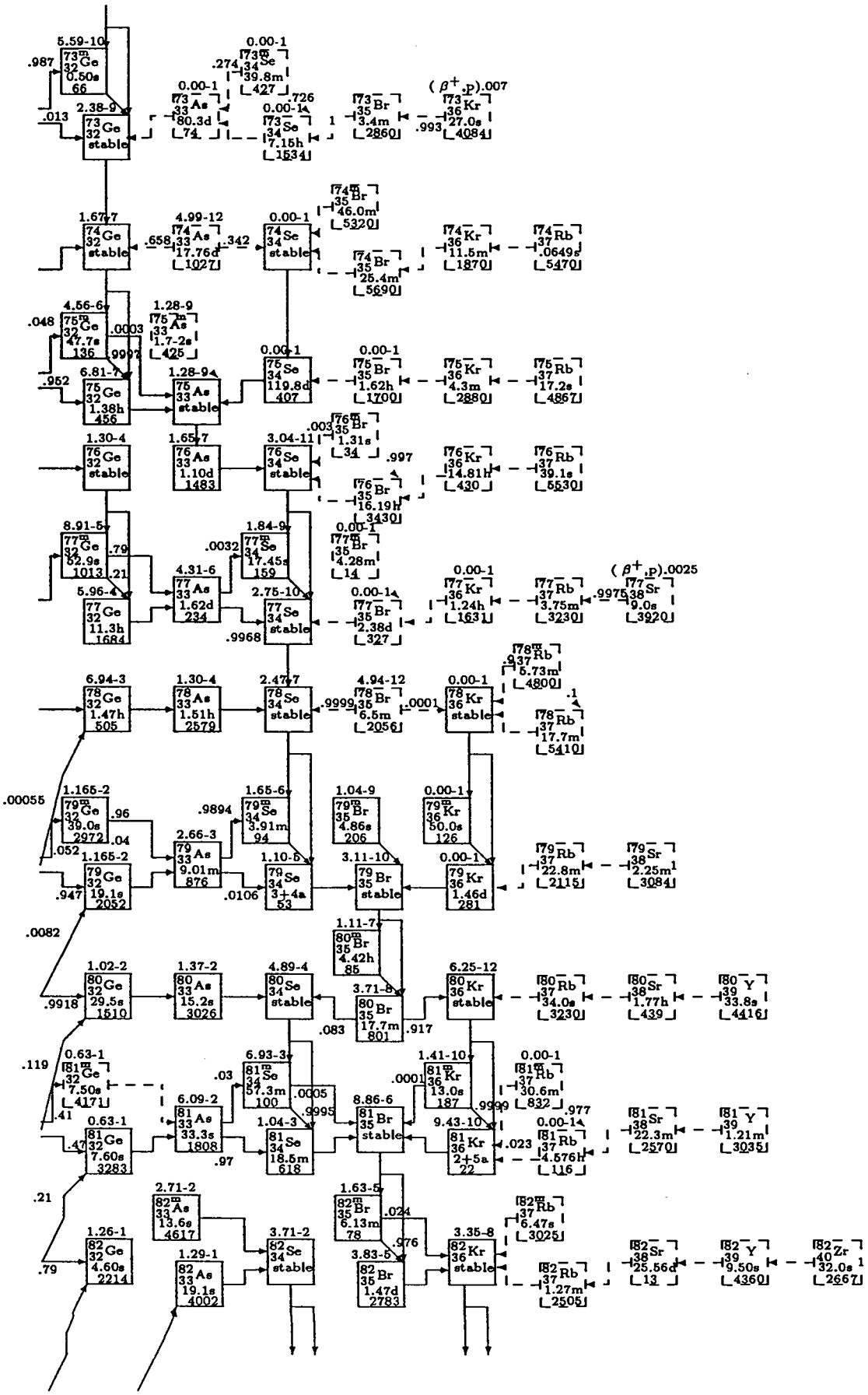
5.59-10
.987
73m Ge 32 0.50s 66
.013
2.38-9
73 Ge 32 stable
0.00-1
73m Se 34 39.8m 427
.274
0.00-1
73 As 33 80.3d 74
0.00-1
73 Se 34 7.15h 1534
.726
1
73 Br 35 3.4m 2860
(β+,p).007
73 Kr 36 27.0s 4084
.993
1.67-7
74 Ge 32 stable
4.99-12
74 As 33 17.76d 1027
.658
.342
0.00-1
74 Se 34 stable
74m Br 35 46.0m 5320
74 Br 35 25.4m 5690
74 Kr 36 11.5m 1870
74 Rb 37 .0649s 5470
4.56-6
.048
75m Ge 32 47.7s 136
.0003
1.28-9
75m As 33 1.7-2s 425
.9997
.952
6.81-7
75 Ge 32 1.38h 456
1.28-9
75 As 33 stable
0.00-1
75 Se 34 119.8d 407
0.00-1
75 Br 35 1.62h 1700
75 Kr 36 4.3m 2880
75 Rb 37 17.2s 4867
1.30-4
76 Ge 32 stable
1.65-7
76 As 33 1.10d 1483
3.04-11
76 Se 34 stable
.003
76m Br 35 1.31s 34
.997
76 Br 35 16.19h 3430
76 Kr 36 14.81h 430
76 Rb 37 39.1s 5530
8.91-5
77m Ge 32 52.9s 1013
.79
.21
5.96-4
77 Ge 32 11.3h 1684
1.84-9
77m Se 34 17.45s 159
.0032
0.00-1
77m Br 35 4.28m 14
4.31-6
77 As 33 1.62d 234
2.75-10
77 Se 34 stable
.9968
0.00-1
77 Br 35 2.38d 327
0.00-1
77 Kr 36 1.24h 1631
77 Rb 37 3.75m 3230
(β+,p).0025
.9975
77 Sr 38 9.0s 3920
6.94-3
78 Ge 32 1.47h 505
1.30-4
78 As 33 1.51h 2579
2.47-7
78 Se 34 stable
.9999
4.94-12
78 Br 35 6.5m 2056
.0001
0.00-1
78 Kr 36 stable
78m Rb 37 6.73m 4800
.937
.1
78 Rb 37 17.7m 5410
.00055
1.165-2
79m Ge 32 39.0s 2972
.96
.04
.052
1.165-2
79 Ge 32 19.1s 2052
.947
2.66-3
79 As 33 9.01m 876
.9894
1.65-6
79m Se 34 3.91m 94
.0106
1.10-6
79 Se 34 3+4a 53
1.04-9
79m Br 35 4.86s 206
3.11-10
79 Br 35 stable
0.00-1
79m Kr 36 50.0s 126
0.00-1
79 Kr 36 1.46d 281
79 Rb 37 22.8m 2115
79 Sr 38 2.25m 3084
.0082
1.11-7
80m Br 35 4.42h 85
1.02-2
80 Ge 32 29.5s 1510
.9918
1.37-2
80 As 33 15.2s 3026
4.89-4
80 Se 34 stable
3.71-8
80 Br 35 17.7m 801
.083
.917
6.25-12
80 Kr 36 stable
80 Rb 37 34.0s 3230
80 Sr 38 1.77h 439
80 Y 39 33.8s 4416
.119
0.63-1
81m Ge 32 7.50s 417
.41
6.93-3
81m Se 34 57.3m 100
.03
.0005
.9995
1.41-10
81m Kr 36 13.0s 187
.0001
.9999
0.00-1
81m Rb 37 30.6m 832
.977
6.09-2
81 As 33 33.3s 1808
8.86-6
81 Br 35 stable
9.43-10
81 Kr 2+5a 22
.023
0.00-1
81 Rb 37 4.576h 116
81 Sr 38 22.3m 2570
81 Y 39 1.21m 3035
0.63-1
81 Ge 32 7.60s 3283
.47
1.04-3
81 Se 34 18.5m 618
.97
.21
2.71-2
82m As 33 13.6s 4617
1.63-5
82m Br 35 6.13m 78
.024
.976
3.83-5
82 Br 35 1.47d 2783
82m Rb 37 6.47s 3025
3.35-8
82 Kr 36 stable
82 Rb 37 1.27m 2505
82 Sr 38 25.56d 13
82 Y 39 9.50s 4360
82 Zr 40 32.0s 2667
1.26-1
82 Ge 32 4.60s 2214
.79
3.71-2
82 Se 34 stable
1.29-1
82 As 33 19.1s 4002

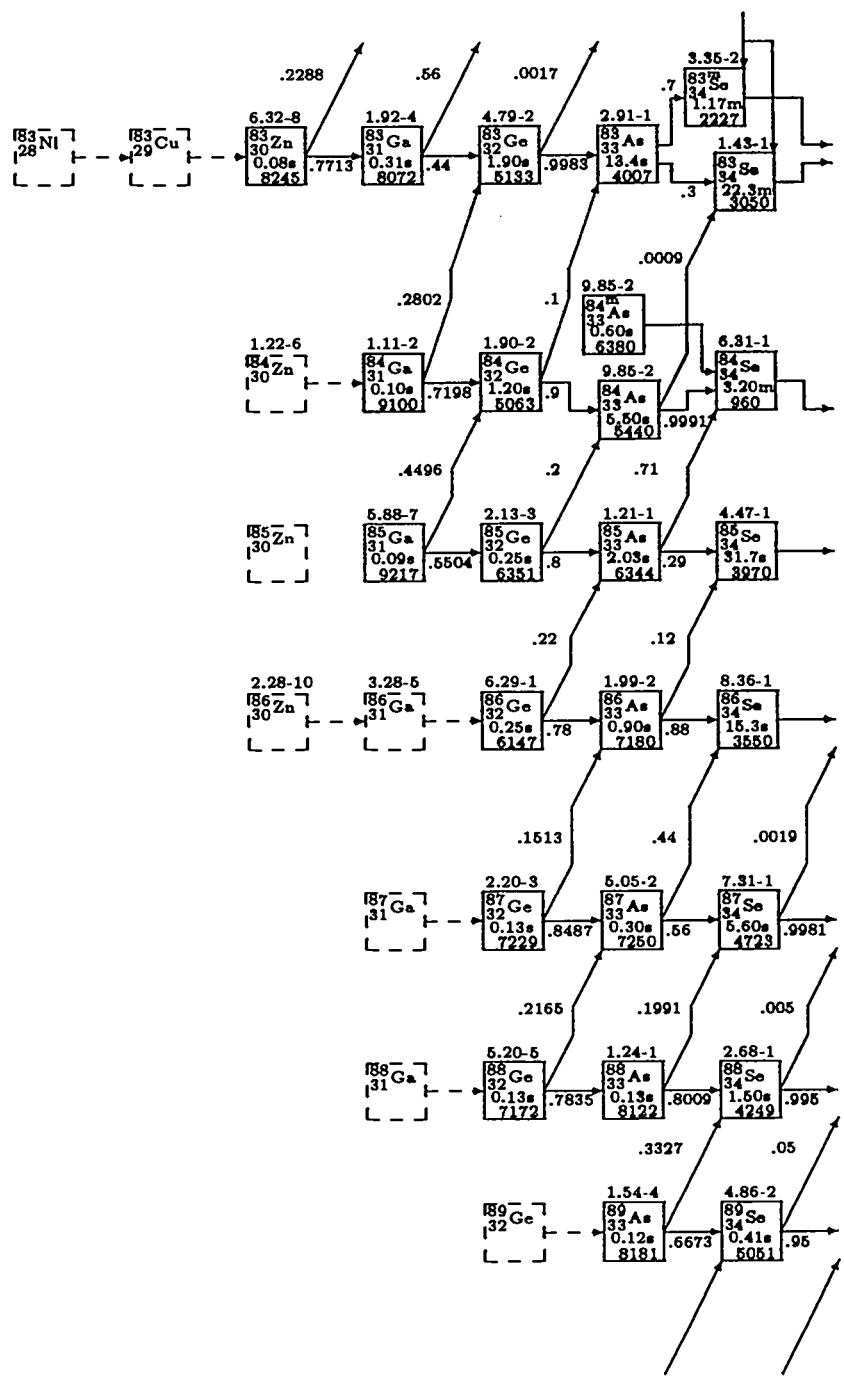
83 28 Ni
83 29 Cu
83 30 Zn 0.08s 8245
6.32-8
.2288
.7713
83 31 Ga 0.31s 8072
1.92-4
.56
.44
83 32 Ge 1.90s 5133
4.79-2
.0017
.9983
83 33 As 13.4s 4007
2.91-1
.7
.3
83m 34 Se 1.17m 2227
3.35-2
83 34 Se 22.3m 3050
1.43-1
84 30 Zn
1.22-6
.2802
.7198
84 31 Ga 0.10s 9100
1.11-2
.1
.9
84 32 Ge 1.20s 5063
1.90-2
84m 33 As 0.60s 6380
9.85-2
.0009
84 33 As 5.50s 6440
9.85-2
.9991
84 34 Se 3.20m 960
6.31-1
85 30 Zn
.4496
.5504
85 31 Ga 0.09s 9217
5.88-7
.2
.8
85 32 Ge 0.25s 6351
2.13-3
.71
.29
85 33 As 2.03s 6344
1.21-1
85 34 Se 31.7s 3970
4.47-1
86 30 Zn
2.28-10
86 31 Ga
3.28-5
.22
.78
86 32 Ge 0.25s 6147
6.29-1
.12
.88
86 33 As 0.90s 7180
1.99-2
86 34 Se 15.3s 3550
8.36-1
87 31 Ga
.1513
.8487
87 32 Ge 0.13s 7229
2.20-3
.44
.56
87 33 As 0.30s 7250
5.05-2
.0019
.9981
87 34 Se 5.60s 4729
7.31-1
88 31 Ga
.2165
.7835
88 32 Ge 0.13s 7172
5.20-5
.1991
.8009
88 33 As 0.13s 8122
1.24-1
.005
.995
88 34 Se 1.50s 4249
2.68-1
89 32 Ge
.3327
.6673
89 33 As 0.12s 8181
1.54-4
.05
.95
89 34 Se 0.41s 5051
4.86-2

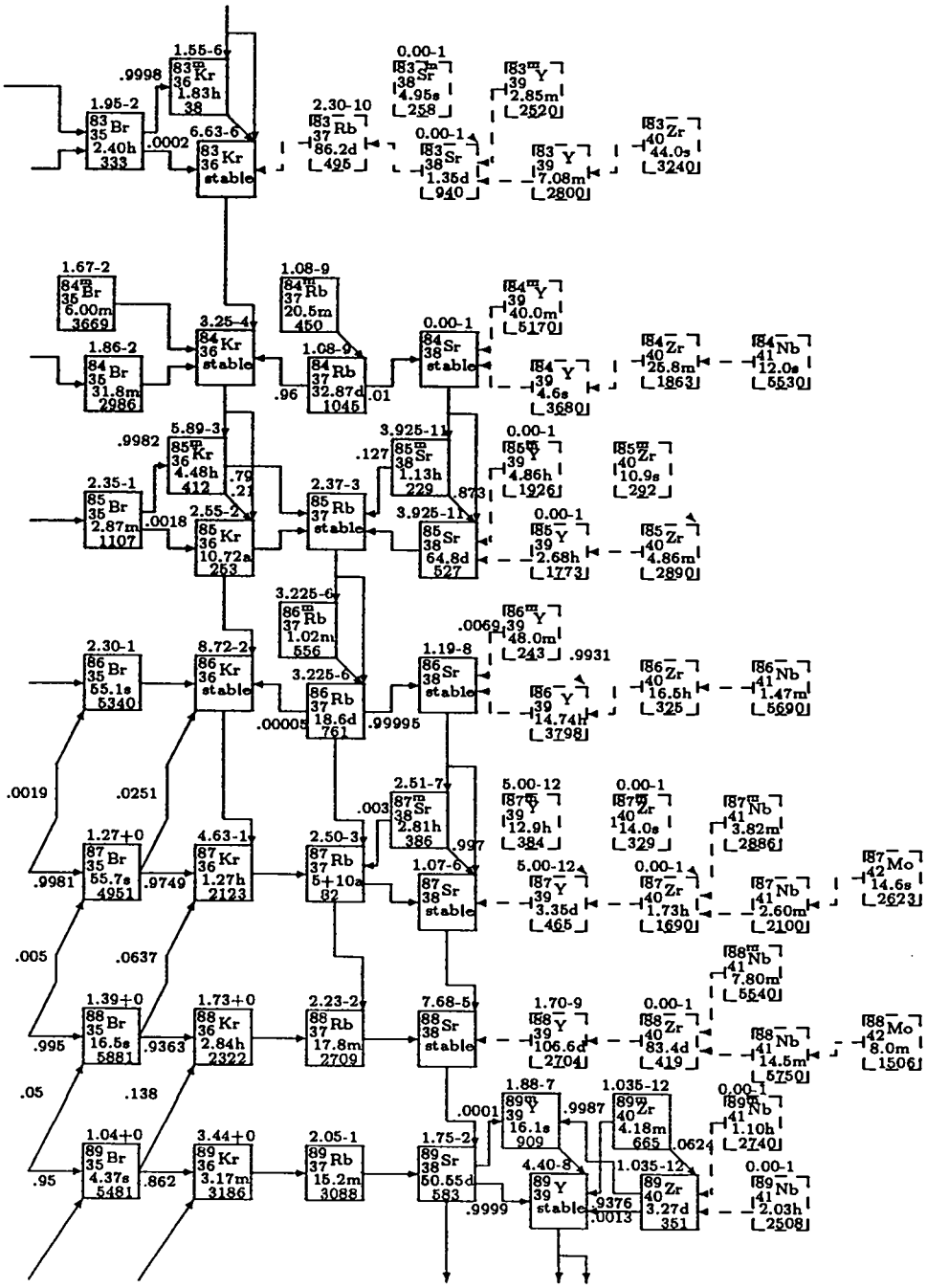
1.55-6
.9998
83m Kr 36 1.83h 38
1.95-2
83 Br 35 2.40h 333
.0002
6.63-6
83 Kr 36 stable
2.30-10
83 Rb 37 86.2d 495
0.00-1
83m Sr 38 4.95s 258
0.00-1
83 Sr 38 1.35d 940
83m Y 39 2.85m 2520
83 Y 39 7.08m 2800
83 Zr 40 44.0s 3240
1.67-2
84m Br 35 6.00m 3669
1.86-2
84 Br 35 31.8m 2986
3.25-4
84 Kr 36 stable
1.08-9
84m Rb 37 20.5m 450
1.08-9
84 Rb 37 32.87d 1045
.96
.01
0.00-1
84 Sr 38 stable
84m Y 39 40.0m 5170
84 Y 39 4.6s 3680
84 Zr 40 25.8m 1863
84 Nb 41 12.0s 5530
.9982
5.89-3
85m Kr 36 4.48h 412
.79
.21
2.35-1
85 Br 35 2.87m 1107
.0018
2.55-2
85 Kr 36 10.72a 253
2.37-3
85 Rb 37 stable
3.925-11
.127
85m Sr 38 1.13h 229
.873
3.925-11
85 Sr 38 64.8d 527
0.00-1
85m Y 39 4.86h 1926
85m Zr 40 10.9s 292
0.00-1
85 Y 39 2.68h 1773
85 Zr 40 4.86m 2890
3.225-6
86m Rb 37 1.02m 556
3.225-6
86 Rb 37 18.6d 761
.00005
.99995
2.30-1
86 Br 35 55.1s 5340
8.72-2
86 Kr 36 stable
1.19-8
86 Sr 38 stable
.0069
86m Y 39 48.0m 243
.9931
86 Y 39 14.74h 3798
86 Zr 40 16.5h 325
86 Nb 41 1.47m 5690
.0019
.0251
2.51-7
.003
87m Sr 38 2.81h 386
.997
5.00-12
87m Y 39 12.9h 384
0.00-1
87m Zr 40 14.0s 329
87m Nb 41 3.82m 2886
1.27+0
87 Br 35 55.7s 4951
.9981
.9749
4.63-1
87 Kr 36 1.27h 2123
2.50-3
87 Rb 37 5+10a 82
1.07-6
87 Sr 38 stable
5.00-12
87 Y 39 3.35d 465
0.00-1
87 Zr 40 1.73h 1690
87 Nb 41 2.60m 2100
87 Mo 42 14.6s 2623
.005
.0637
88m Nb 41 7.80m 5540
1.39+0
88 Br 35 16.5s 5881
.995
.9363
1.73+0
88 Kr 36 2.84h 2322
2.23-2
88 Rb 37 17.8m 2709
7.68-5
88 Sr 38 stable
1.70-9
88 Y 39 106.6d 2704
0.00-1
88 Zr 40 83.4d 419
88 Nb 41 14.5m 5750
88 Mo 42 8.0m 1506
.05
.138
1.88-7
.0001
89m Y 39 16.1s 909
.9987
1.035-12
89m Zr 40 4.18m 665
.0624
0.00-1
89m Nb 41 1.10h 2740
1.04+0
89 Br 35 4.37s 5481
.95
.862
3.44+0
89 Kr 36 3.17m 3186
2.05-1
89 Rb 37 15.2m 3088
1.75-2
89 Sr 38 50.55d 583
.9999
4.40-8
89 Y 39 stable
.9376
.0013
1.035-12
89 Zr 40 3.27d 351
0.00-1
89 Nb 41 2.03h 2508

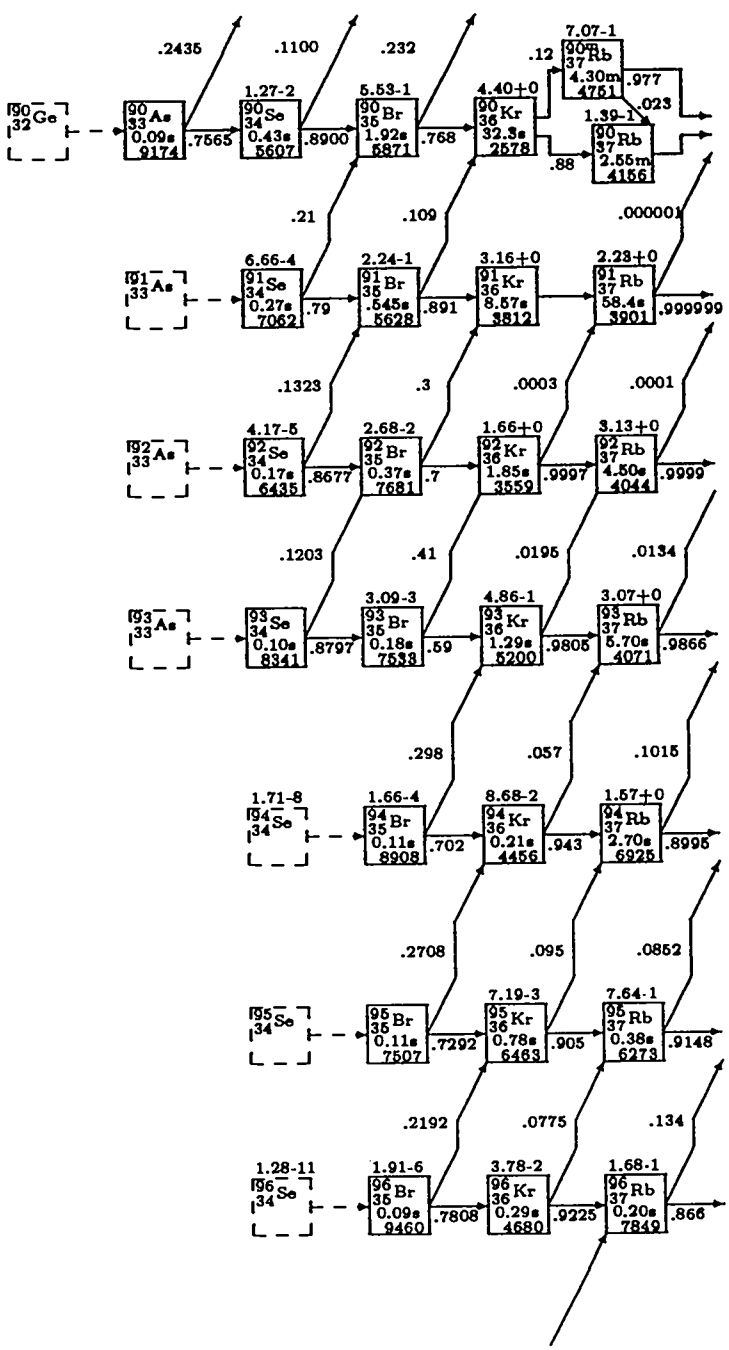
90 32 Ge
90 33 As 0.09s 9174
90 34 Se 0.43s 5607
90 35 Br 1.92s 5871
90 36 Kr 32.3s 2578
90 37 Rb 4.30m 4751
90 37 Rb 2.55m 4156
91 33 As
91 34 Se 0.27s 7062
91 35 Br .545s 5628
91 36 Kr 8.57s 3812
91 37 Rb 58.4s 3901
92 33 As
92 34 Se 0.17s 6435
92 35 Br 0.37s 7681
92 36 Kr 1.85s 3559
92 37 Rb 4.50s 4044
93 33 As
93 34 Se 0.10s 8341
93 35 Br 0.18s 7533
93 36 Kr 1.29s 5200
93 37 Rb 5.70s 4071
94 34 Se
94 35 Br 0.11s 8908
94 36 Kr 0.21s 4456
94 37 Rb 2.70s 6925
95 34 Se
95 35 Br 0.11s 7507
95 36 Kr 0.78s 6463
95 37 Rb 0.38s 6273
96 34 Se
96 35 Br 0.09s 9460
96 36 Kr 0.29s 4680
96 37 Rb 0.20s 7849
.2435
.1100
.232
.12
7.07-1
.977
.023
1.27-2
5.53-1
4.40+0
1.39-1
.7565
.8900
.768
.88
.21
.109
.000001
6.66-4
2.24-1
3.16+0
2.23+0
.79
.891
.999999
.1323
.3
.0003
.0001
4.17-5
2.68-2
1.66+0
3.13+0
.8677
.7
.9997
.9999
.1203
.41
.0195
.0134
3.09-3
4.86-1
3.07+0
.8797
.59
.9805
.9866
.298
.057
.1015
1.71-8
1.66-4
8.68-2
1.57+0
.702
.943
.8995
.2708
.095
.0852
7.19-3
7.64-1
.7292
.905
.9148
.2192
.0775
.134
1.28-11
1.91-6
3.78-2
1.68-1
.7808
.9225
.866

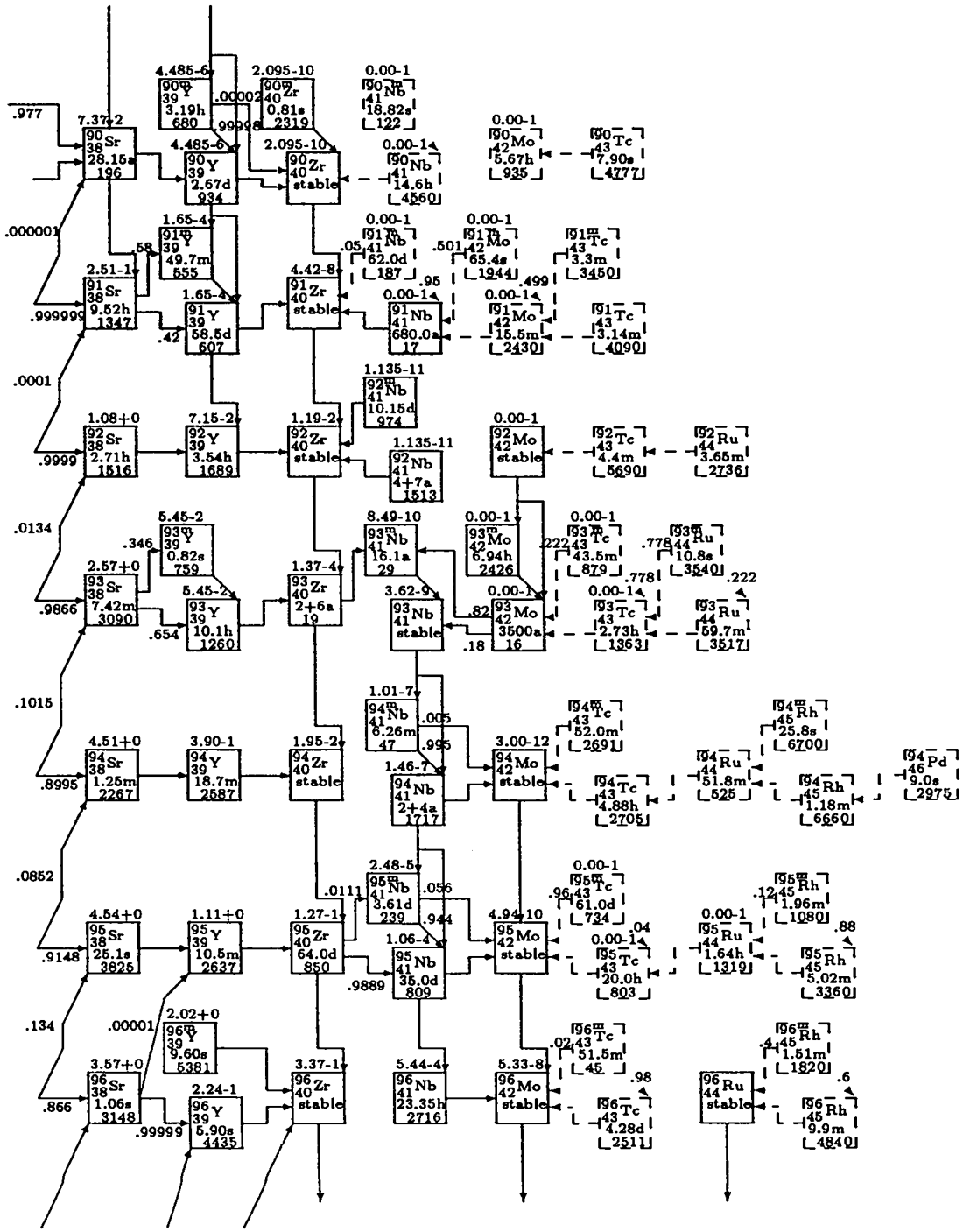

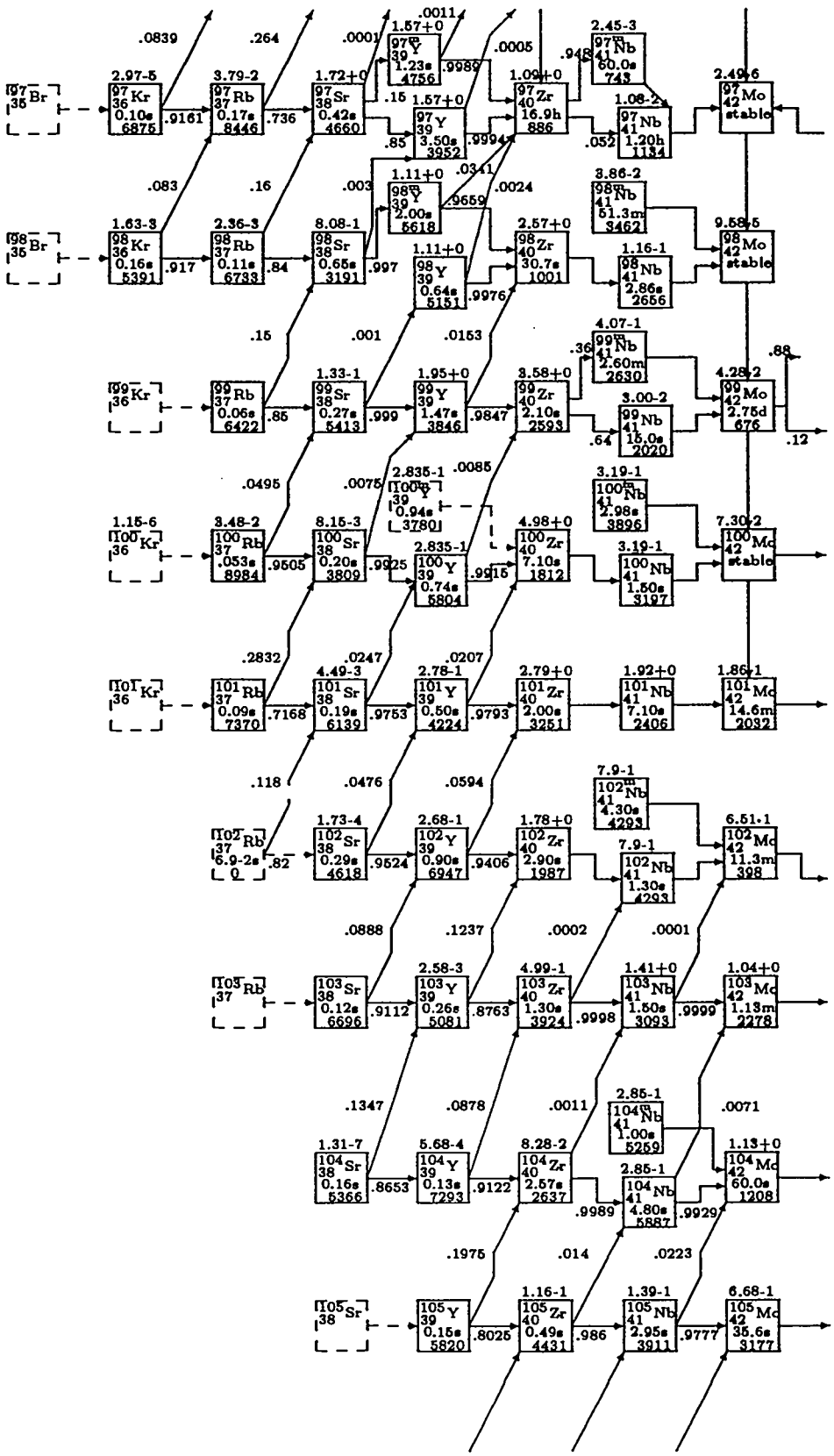
97Br
35
98Br
35
99Kr
36
100Kr
36
101Kr
36
102Rb
37
6.9-2s
0
103Rb
37
105Sr
38
97Kr 36 0.10s 6875
97Rb 37 0.17s 8446
97Sr 38 0.42s 4660
97Y 39 1.23s 4756
97Y 39 3.50s 3952
97Zr 40 16.9h 886
97Nb 41 60.0s 743
97Mo 42 stable
98Kr 36 0.16s 5391
98Rb 37 0.11s 6733
98Sr 38 0.65s 3191
98Y 39 2.00s 5618
98Y 39 0.64s 5151
98Zr 40 30.7s 1001
98Nb 41 2.86s 2656
98Mo 42 stable
99Rb 37 0.06s 6422
99Sr 38 0.27s 5413
99Y 39 1.47s 3846
99Zr 40 2.10s 2593
99Nb 41 15.0s 2020
99Mo 42 2.75d 676
100Rb 37 .053s 8984
100Sr 38 0.20s 3809
100Y 39 0.74s 5804
100Y 39 0.94s 3780
100Zr 40 7.10s 1812
100Nb 41 1.50s 3197
100Mo 42 stable
101Rb 37 0.09s 7370
101Sr 38 0.19s 6139
101Y 39 0.50s 4224
101Zr 40 2.00s 3251
101Nb 41 7.10s 2406
101Mo 42 14.6m 2032
102Rb 37 6.9-2s 0
102Sr 38 0.29s 4618
102Y 39 0.90s 6947
102Zr 40 2.90s 1987
102Nb 41 1.30s 4293
102Nb 41 4.30s 4293
102Mo 42 11.3m 398
103Sr 38 0.12s 6696
103Y 39 0.26s 5081
103Zr 40 1.30s 3924
103Nb 41 1.50s 3093
103Mo 42 1.13m 2278
104Sr 38 0.16s 5366
104Y 39 0.13s 7293
104Zr 40 2.67s 2637
104Nb 41 4.80s 5887
104Nb 41 1.00s 5259
104Mo 42 60.0s 1208
105Y 39 0.15s 5820
105Zr 40 0.49s 4431
105Nb 41 2.95s 3911
105Mo 42 35.6s 3177
.0839
.264
.0001
.0011
.0005
.948
.052
.083
.16
.003
.0341
.0024
.9659
.917
.84
.997
.9976
.15
.001
.0153
.36
.88
.64
.12
.0495
.0075
.0085
.2832
.0247
.0207
.7168
.9753
.9793
.118
.0476
.0594
.82
.9524
.9406
.0888
.1237
.0002
.0001
.9112
.8763
.9998
.9999
.1347
.0878
.0011
.0071
.8653
.9122
.9989
.9929
.1975
.014
.0223
.8025
.986
.9777

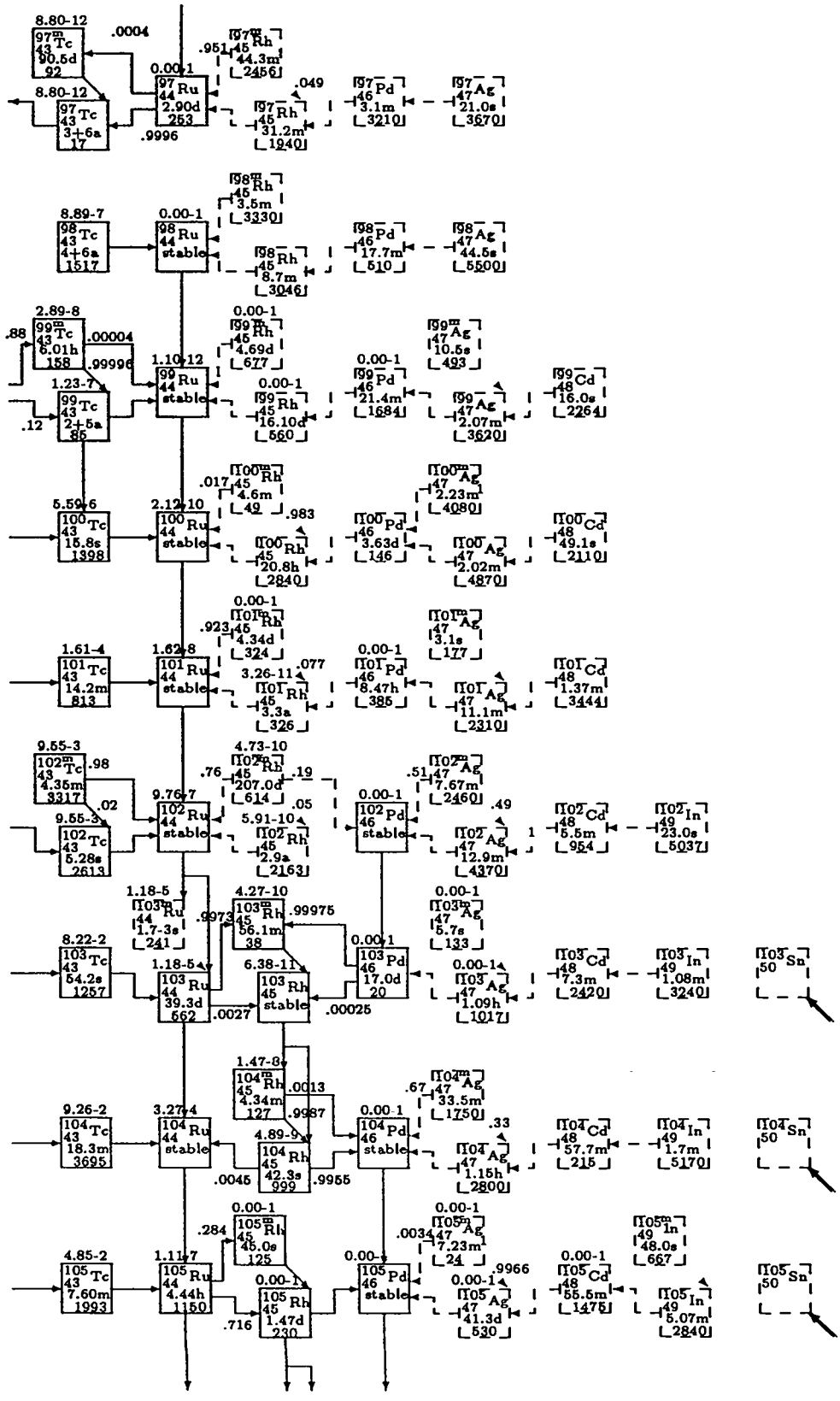
8.80-12
97m Tc 43 90.5d 92
.0004
97m Rh 45 44.3m 2456
.951
0.00-1
97 Ru 44 2.90d 253
.049
97 Pd 46 3.1m 3210
97 Ag 47 21.0s 3670
8.80-12
97 Tc 43 3+6a 17
.9996
97 Rh 45 31.2m 1940
98m Rh 45 3.5m 3330
8.89-7
98 Tc 43 4+6a 1517
0.00-1
98 Ru 44 stable
98 Pd 46 17.7m 510
98 Ag 47 44.5s 5500
98 Rh 45 8.7m 3046
2.89-8
99m Tc 43 6.01h 158
.88
.00004
.99996
99m Rh 45 4.69d 677
0.00-1
99m Ag 47 10.5s 493
1.10-12
99 Ru 44 stable
1.23-7
99 Tc 43 2+5a 85
.12
0.00-1
99 Pd 46 21.4m 1684
99 Cd 48 16.0s 2264
0.00-1
99 Rh 45 16.10d 560
99 Ag 47 2.07m 3620
100m Rh 45 4.6m 49
.017
100m Ag 47 2.23m 4080
5.59-6
100 Tc 43 15.8s 1398
2.12-10
100 Ru 44 stable
.983
100 Pd 46 3.63d 146
100 Cd 48 49.1s 2110
100 Rh 45 20.8h 2840
100 Ag 47 2.02m 4870
0.00-1
101m Rh 45 4.34d 324
.923
101m Ag 47 3.1s 177
1.61-4
101 Tc 43 14.2m 813
1.62-8
101 Ru 44 stable
3.26-11
.077
0.00-1
101 Pd 46 8.47h 385
101 Cd 48 1.37m 3444
101 Rh 45 3.3a 326
101 Ag 47 11.1m 2310
9.55-3
102m Tc 43 4.35m 3317
.98
4.73-10
102m Rh 45 207.0d 614
.76
.19
102m Ag 47 7.67m 2460
.51
.02
9.76-7
102 Ru 44 stable
.05
5.91-10
0.00-1
102 Pd 46 stable
.49
102 Cd 48 5.5m 954
102 In 49 23.0s 5037
9.55-3
102 Tc 43 5.28s 2613
102 Rh 45 2.9a 2163
102 Ag 47 12.9m 4370
1
1.18-5
103m Ru 44 1.7-3s 241
4.27-10
103m Rh 45 56.1m 38
.9973
.99975
0.00-1
103m Ag 47 5.7s 133
8.22-2
103 Tc 43 54.2s 1257
0.00-1
103 Pd 46 17.0d 20
103 Cd 48 7.3m 2420
103 In 49 1.08m 3240
103 Sn 50
1.18-5
103 Ru 44 39.3d 562
6.38-11
103 Rh 45 stable
.0027
.00025
0.00-1
103 Ag 47 1.09h 1017
1.47-8
104m Rh 45 4.34m 127
.0013
.9987
104m Ag 47 33.5m 1750
.67
9.26-2
104 Tc 43 18.3m 3695
3.27-4
104 Ru 44 stable
0.00-1
104 Pd 46 stable
.33
104 Cd 48 57.7m 215
104 In 49 1.7m 5170
104 Sn 50
4.89-9
104 Rh 45 42.3s 999
.0045
.9955
104 Ag 47 1.15h 2800
0.00-1
105m Rh 45 45.0s 125
.284
0.00-1
105m Ag 47 7.23m 24
.0034
105m In 49 48.0s 667
4.85-2
105 Tc 43 7.60m 1993
1.11-7
105 Ru 44 4.44h 1150
0.00-1
105 Pd 46 stable
0.00-1
105 Cd 48 55.5m 1475
.9966
105 Sn 50
0.00-1
105 Rh 45 1.47d 230
.716
0.00-1
105 Ag 47 41.3d 530
105 In 49 5.07m 2840

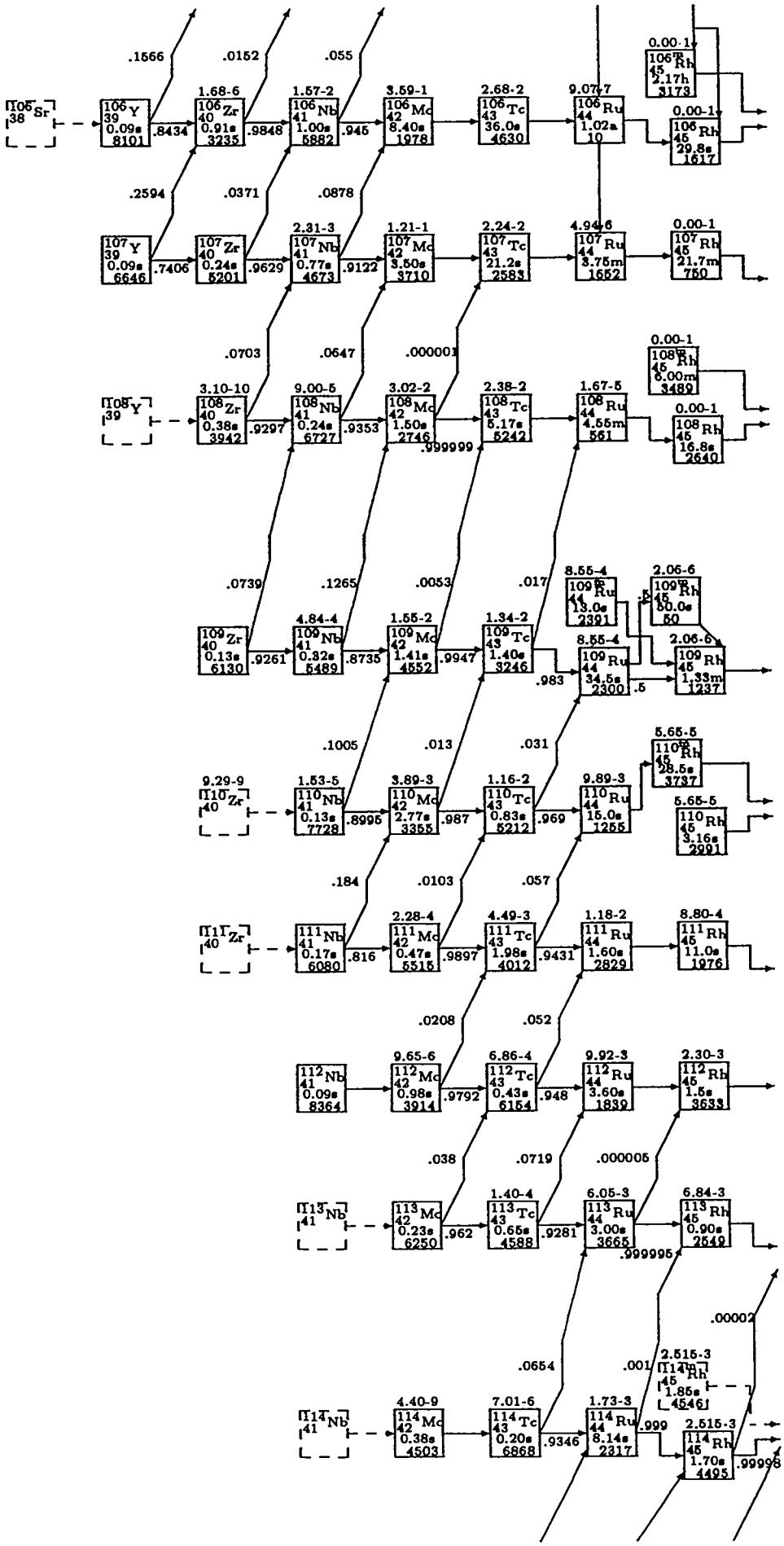
105Sr 38
106Y 39 0.09s 8101
106Zr 40 0.91s 3235
106Nb 41 1.00s 5882
106Mo 42 8.40s 1978
106Tc 43 36.0s 4630
106Ru 44 1.02a 10
106Rh 45 29.8s 1617
106Rh 45 2.17h 3173
107Y 39 0.09s 6646
107Zr 40 0.24s 5201
107Nb 41 0.77s 4673
107Mo 42 3.50s 3710
107Tc 43 21.2s 2583
107Ru 44 3.75m 1652
107Rh 45 21.7m 750
108Y 39
108Zr 40 0.38s 3942
108Nb 41 0.24s 6727
108Mo 42 1.50s 2746
108Tc 43 5.17s 5242
108Ru 44 4.55m 561
108Rh 45 16.8s 2640
108Rh 45 6.00m 3489
109Zr 40 0.13s 6130
109Nb 41 0.32s 5489
109Mo 42 1.41s 4552
109Tc 43 1.40s 3246
109Ru 44 34.5s 2300
109Rh 45 1.33m 1237
109Ru 44 13.0s 2391
109Rh 45 50.0s 50
110Zr 40
110Nb 41 0.13s 7728
110Mo 42 2.77s 3355
110Tc 43 0.83s 5212
110Ru 44 15.0s 1255
110Rh 45 3.16s 2991
110Rh 45 28.5s 3737
111Zr 40
111Nb 41 0.17s 6080
111Mo 42 0.47s 5515
111Tc 43 1.98s 4012
111Ru 44 1.60s 2829
111Rh 45 11.0s 1976
112Nb 41 0.09s 8364
112Mo 42 0.98s 3914
112Tc 43 0.43s 6154
112Ru 44 3.60s 1839
112Rh 45 1.5s 3633
113Nb 41
113Mo 42 0.23s 6250
113Tc 43 0.65s 4588
113Ru 44 3.00s 3665
113Rh 45 0.90s 2549
114Nb 41
114Mo 42 0.38s 4503
114Tc 43 0.20s 6868
114Ru 44 8.14s 2317
114Rh 45 1.70s 4495
114Rh 45 1.85s 4546
.1666
.8434
.0152
.9848
.055
.945
.2594
.7406
.0371
.9629
.0878
.9122
.0703
.9297
.0647
.9353
.000001
.999999
.0739
.9261
.1265
.8735
.0053
.9947
.017
.983
.5
.1005
.8995
.013
.987
.031
.969
.184
.816
.0103
.9897
.057
.9431
.0208
.9792
.052
.948
.038
.962
.0719
.9281
.000005
.999995
.0654
.9346
.001
.999
.00002
.99998

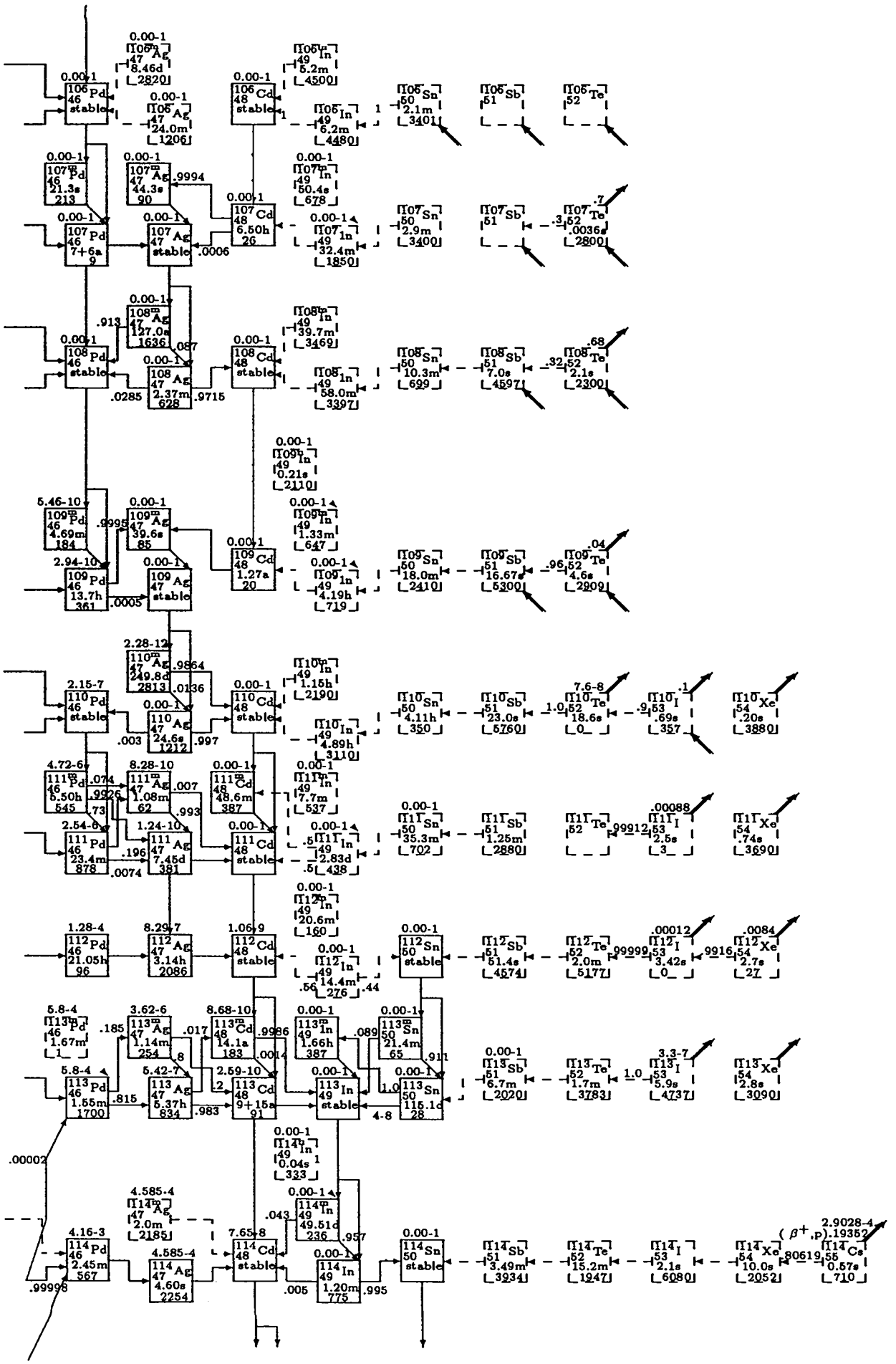
106 Pd 46 stable
106 Ag 47 8.46d 2820
106 Ag 47 24.0m 1206
106 Cd 48 stable
106 In 49 5.2m 4500
106 In 49 6.2m 4480
106 Sn 50 2.1m 3401
106 Sb 51
106 Te 52
107m Pd 46 21.3s 213
107m Ag 47 44.3s 90
107 Pd 46 7+6a 9
107 Ag 47 stable
107 Cd 48 6.50h 26
107m In 49 50.4s 678
107 In 49 32.4m 1850
107 Sn 50 2.9m 3400
107 Sb 51
107 Te 52 .0036s 2800
108m Ag 47 127.0s 1636
108 Pd 46 stable
108 Ag 47 2.37m 628
108 Cd 48 stable
108m In 49 39.7m 3469
108 In 49 58.0m 3397
108 Sn 50 10.3m 699
108 Sb 51 7.0s 4597
108 Te 52 2.1s 2300
109m Pd 46 4.69m 184
109m Ag 47 39.6s 85
109 Pd 46 13.7h 361
109 Ag 47 stable
109 Cd 48 1.27a 20
109m In 49 0.21s 2110
109m In 49 1.33m 647
109 In 49 4.19h 719
109 Sn 50 18.0m 2410
109 Sb 51 16.67s 5300
109 Te 52 4.6s 2909
110m Ag 47 249.8d 2813
110 Pd 46 stable
110 Ag 47 24.6s 1212
110 Cd 48 stable
110m In 49 1.15h 2190
110 In 49 4.89h 3110
110 Sn 50 4.11h 350
110 Sb 51 23.0s 5760
110 Te 52 18.6s 0
110 I 53 .69s 357
110 Xe 54 .20s 3880
111m Pd 46 5.50h 545
111 Pd 46 23.4m 878
111m Ag 47 1.08m 62
111 Ag 47 7.45d 381
111m Cd 48 48.6m 387
111 Cd 48 stable
111m In 49 7.7m 537
111 In 49 2.83d 438
111 Sn 50 35.3m 702
111 Sb 51 1.25m 2880
111 Te 52
111 I 53 2.5s 3
111 Xe 54 .74s 3690
112 Pd 46 21.05h 96
112 Ag 47 3.14h 2086
112 Cd 48 stable
112m In 49 20.6m 160
112 In 49 14.4m 276
112 Sn 50 stable
112 Sb 51 51.4s 4574
112 Te 52 2.0m 5177
112 I 53 3.42s 0
112 Xe 54 2.7s 27
113m Pd 46 1.67m 1
113 Pd 46 1.55m 1700
113m Ag 47 1.14m 254
113 Ag 47 5.37h 834
113m Cd 48 14.1a 183
113 Cd 48 9+15a 91
113m In 49 1.66h 387
113 In 49 stable
113m Sn 50 21.4m 65
113 Sn 50 115.1d 28
113 Sb 51 6.7m 2020
113 Te 52 1.7m 3783
113 I 53 5.9s 4737
113 Xe 54 2.8s 3090
114m Ag 47 2.0m 2185
114 Pd 46 2.45m 567
114 Ag 47 4.60s 2254
114 Cd 48 stable
114m In 49 49.51d 236
114 In 49 1.20m 775
114 In 49 0.04s 1 333
114 Sn 50 stable
114 Sb 51 3.49m 3934
114 Te 52 15.2m 1947
114 I 53 2.1s 6080
114 Xe 54 10.0s 2052
114 Cs 55 0.57s 710
( β+ ,p) .19352
.00002
.99998

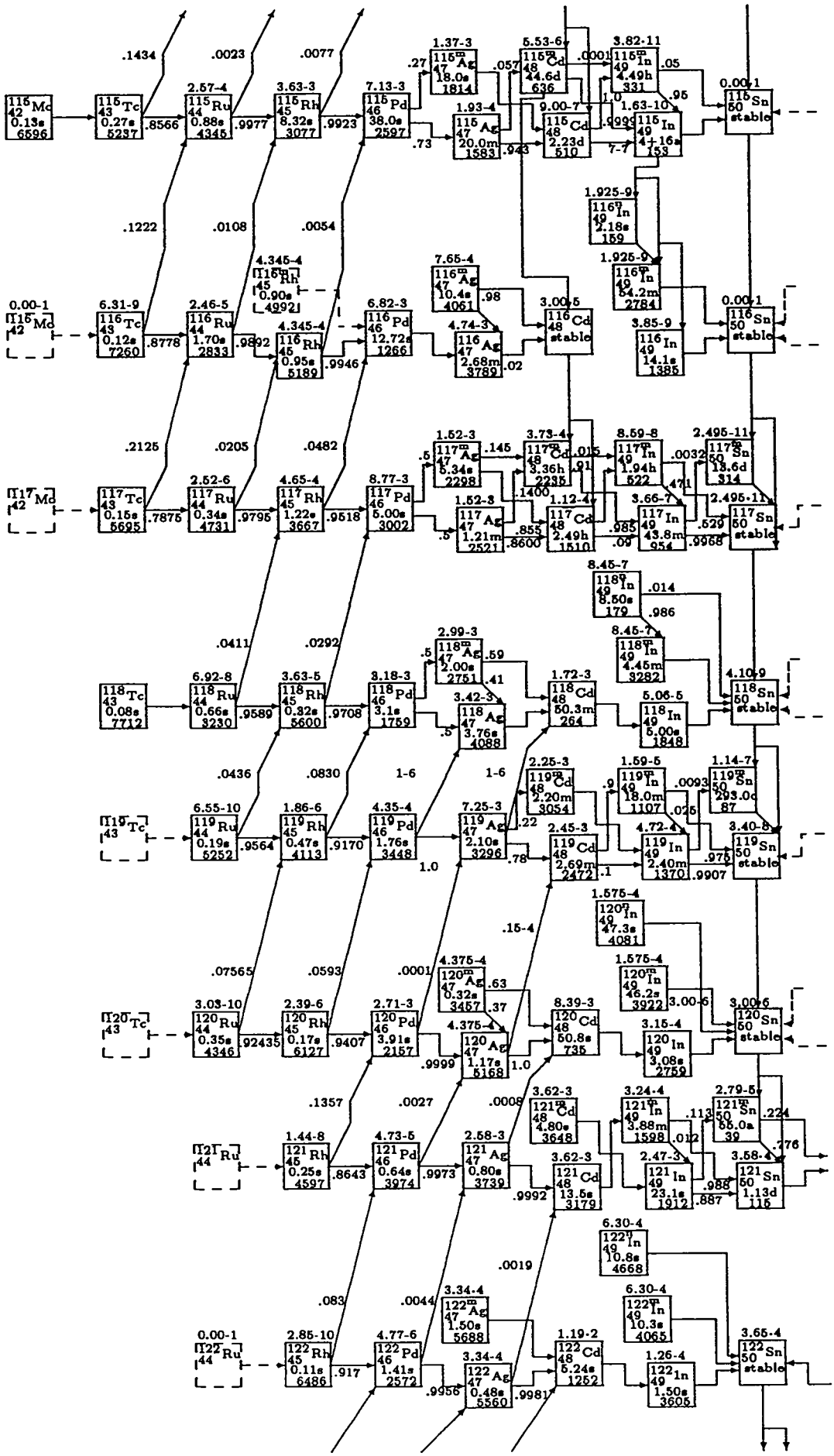
115 Mo 42 0.13s 6596
115 Tc 43 0.27s 5237
115 Ru 44 0.88s 4345
115 Rh 45 8.32s 3077
115 Pd 46 38.0s 2597
115m Ag 47 18.0s 1814
115 Ag 47 20.0m 1583
115m Cd 48 44.6d 636
115 Cd 48 2.23d 510
115m In 49 4.49h 331
115 In 49 4+16s 153
115 Sn 50 stable
116m In 49 2.18s 159
116m In 49 54.2m 2784
116 In 49 14.1s 1385
116 Sn 50 stable
116 Mo 42
116 Tc 43 0.12s 7260
116 Ru 44 1.70s 2833
116 Rh 45 0.95s 5189
116m Rh 45 0.90s 4992
116 Pd 46 12.72s 1266
116m Ag 47 10.4s 4061
116 Ag 47 2.68m 3789
116 Cd 48 stable
117 Mo 42
117 Tc 43 0.15s 5695
117 Ru 44 0.34s 4731
117 Rh 45 1.22s 3667
117 Pd 46 5.00s 3002
117m Ag 47 5.34s 2298
117 Ag 47 1.21m 2521
117m Cd 48 3.36h 2235
117 Cd 48 2.49h 1510
117m In 49 1.94h 522
117 In 49 43.8m 954
117m Sn 50 13.6d 314
117 Sn 50 stable
118 Tc 43 0.08s 7712
118 Ru 44 0.66s 3230
118 Rh 45 0.32s 5600
118 Pd 46 3.1s 1759
118m Ag 47 2.00s 2751
118 Ag 47 3.76s 4088
118m Cd 48 50.3m 264
118m In 49 8.5s 179
118 In 49 5.00s 1848
118m In 49 4.45m 3282
118 Sn 50 stable
119 Tc 43
119 Ru 44 0.19s 5252
119 Rh 45 0.47s 4113
119 Pd 46 1.76s 3448
119m Ag 47 2.10s 3296
119m Cd 48 2.20m 3054
119 Cd 48 2.69m 2472
119m In 49 18.0m 1107
119 In 49 2.40m 1370
119m Sn 50 293.0d 87
119 Sn 50 stable
120 Tc 43
120 Ru 44 0.35s 4346
120 Rh 45 0.17s 6127
120 Pd 46 3.91s 2157
120m Ag 47 0.32s 3457
120 Ag 47 1.17s 5168
120m In 49 47.3s 4081
120m In 49 46.2s 3922
120 Cd 48 50.8s 735
120 In 49 3.08s 2759
120 Sn 50 stable
121 Ru 44
121 Rh 45 0.25s 4597
121 Pd 46 0.64s 3974
121m Ag 47 0.80s 3739
121m Cd 48 4.80s 3648
121 Cd 48 13.5s 3179
121m In 49 3.88m 1598
121 In 49 23.1s 1912
121m Sn 50 55.0s 39
121 Sn 50 1.13d 115
122 Ru 44
122 Rh 45 0.11s 6486
122 Pd 46 1.41s 2572
122m Ag 47 1.50s 5688
122 Ag 47 0.48s 5560
122m In 49 10.8s 4668
122m In 49 10.3s 4065
122 Cd 48 5.24s 1252
122 In 49 1.50s 3605
122 Sn 50 stable

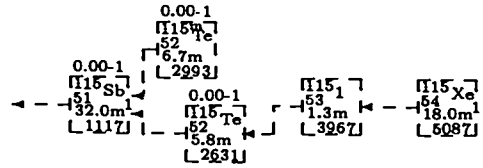
0.00-1
115m Te
52
6.7m
2993
0.00-1
115 Sb
51
32.0m
1117
0.00-1
115 Te
52
5.8m
2631
115 I
53
1.3m
3967
115 Xe
54
18.0m
5087

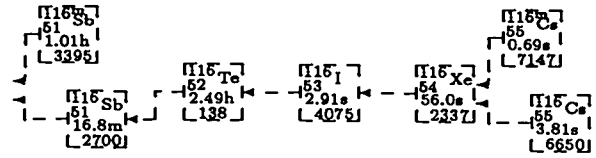
116m Sb
51
1.01h
3395
116 Sb
51
16.8m
2700
116 Te
52
2.49h
138
116 I
53
2.91s
4075
116 Xe
54
56.0s
2337
116m Cs
55
0.69s
7147
116 Cs
55
3.81s
6650

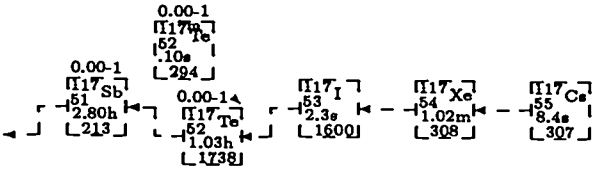
0.00-1
117m Te
52
.10s
294
0.00-1
117 Sb
51
2.80h
213
0.00-1
117 Te
52
1.03h
1738
117 I
53
2.3s
1600
117 Xe
54
1.02m
308
117 Cs
55
8.4s
307

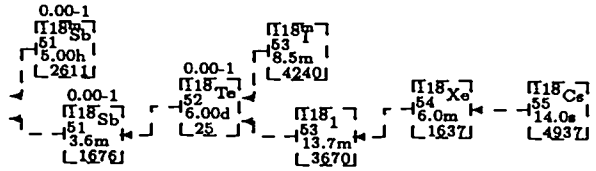
0.00-1
118m Sb
51
5.00h
2611
0.00-1
118 Sb
51
3.6m
1676
0.00-1
118 Te
52
6.00d
25
118m I
53
8.5m
4240
118 I
53
13.7m
3670
118 Xe
54
6.0m
1637
118 Cs
55
14.0s
4937

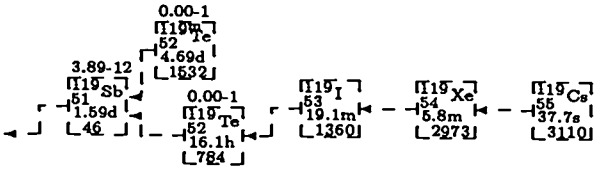
0.00-1
119m Te
52
4.69d
1532
3.89-12
119 Sb
51
1.59d
46
0.00-1
119 Te
52
16.1h
784
119 I
53
19.1m
1360
119 Xe
54
5.8m
2973
119 Cs
55
37.7s
3110

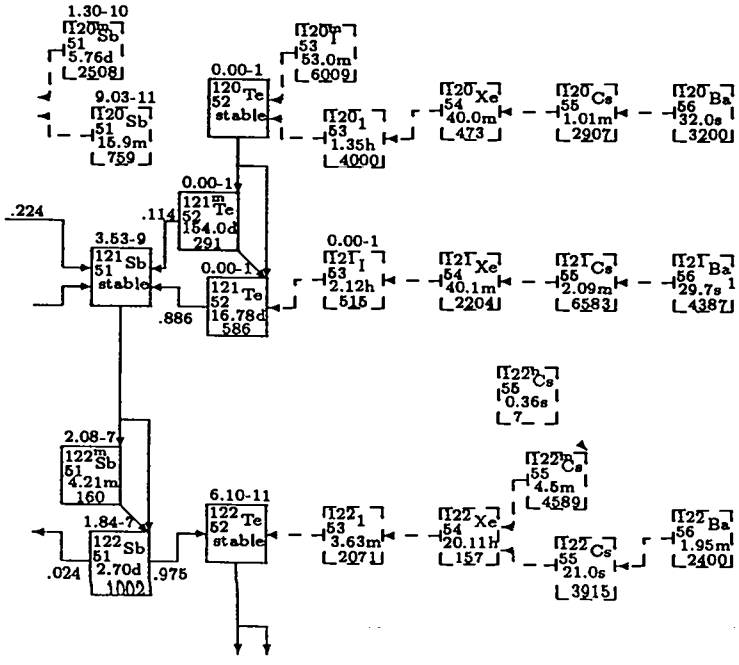
1.30-10
120m Sb
51
5.76d
2508
9.03-11
120 Sb
51
15.9m
759
120m I
53
53.0m
6009
0.00-1
120 Te
52
stable
120 I
53
1.35h
4000
120 Xe
54
40.0m
473
120 Cs
55
1.01m
2907
120 Ba
56
32.0s
3200
.224
.114
0.00-1
121m Te
52
164.0d
291
3.53-9
121 Sb
51
stable
0.00-1
121 Te
52
16.78d
586
.886
121 I
53
2.12h
515
121 Xe
54
40.1m
2204
121 Cs
55
2.09m
6583
121 Ba
56
29.7s
4387
122m Cs
55
0.36s
7
2.08-7
122m Sb
51
4.21m
160
122m Cs
55
4.5m
4589
6.10-11
122 Te
52
stable
1.84-7
122 Sb
51
2.70d
1002
.024
.975
122 I
53
3.63m
2071
122 Xe
54
20.11h
157
122 Cs
55
21.0s
3915
122 Ba
56
1.95m
2400

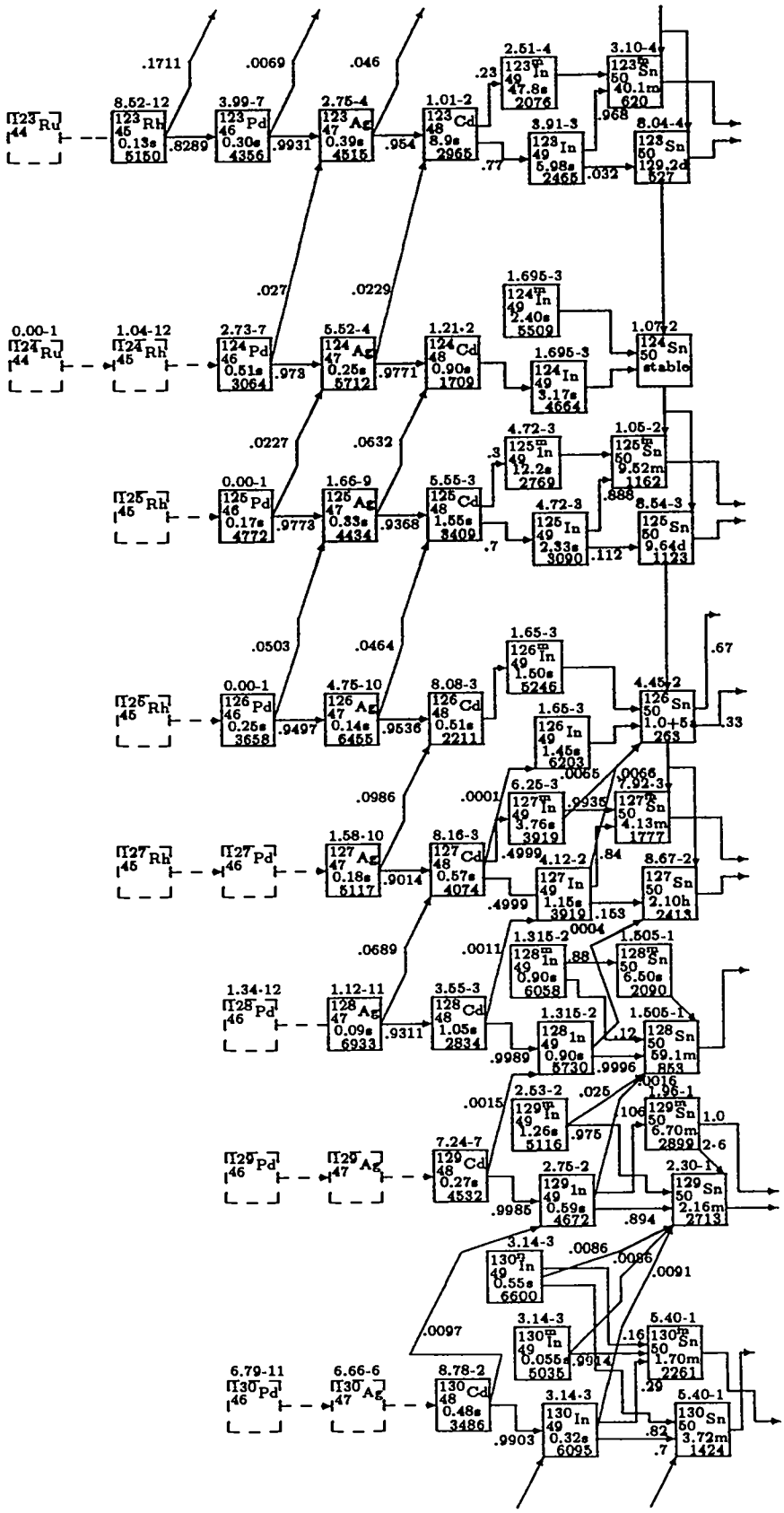
123Ru 44
123Rh 45 0.13s 5150
8.52-12
.1711
.8289
123Pd 46 0.30s 4356
3.99-7
.0069
.9931
123Ag 47 0.39s 4515
2.75-4
.046
.954
123Cd 48 8.9s 2965
1.01-2
.23
.77
123mIn 49 47.8s 2076
2.51-4
123In 49 5.98s 2465
3.91-3
.968
.032
123mSn 50 40.1m 620
3.10-4
123Sn 50 129.2d 527
8.04-4
124Ru 44
0.00-1
124Rh 45
1.04-12
124Pd 46 0.51s 3064
2.73-7
.027
.973
124Ag 47 0.25s 5712
5.52-4
.0229
.9771
124Cd 48 0.90s 1709
1.21-2
124mIn 49 2.40s 5509
1.695-3
124In 49 3.17s 4664
1.695-3
124Sn 50 stable
1.07-2
125Rh 45
0.00-1
125Pd 46 0.17s 4772
.0227
.9773
125Ag 47 0.33s 4434
1.66-9
.0632
.9368
125Cd 48 1.55s 8409
5.55-3
125mIn 49 12.2s 2769
4.72-3
.3
125In 49 2.33s 3090
4.72-3
.7
125mSn 50 9.52m 1162
1.05-2
.888
.112
125Sn 50 9.64d 1123
8.54-3
126Rh 45
0.00-1
126Pd 46 0.25s 3658
.0503
.9497
126Ag 47 0.14s 6455
4.75-10
.0464
.9536
126Cd 48 0.51s 2211
8.08-3
126mIn 49 1.50s 5246
1.65-3
126In 49 1.45s 6203
1.65-3
.0065
126Sn 50 1.0+5 263
4.45-2
.67
.33
127Rh 45
127Pd 46
.0986
1.58-10
127Ag 47 0.18s 5117
.9014
127Cd 48 0.57s 4074
8.16-3
.0001
127mIn 49 3.76s 3919
6.25-3
.9935
127mSn 50 4.13m 1777
7.92-3
.0066
.4999
127In 49 1.15s 3919
4.12-2
.4999
.84
127Sn 50 2.10h 2413
8.67-2
.153
1.34-12
128Pd 46
.0689
1.12-11
128Ag 47 0.09s 6933
.9311
128Cd 48 1.05s 2834
3.55-3
.0011
128mIn 49 0.90s 6058
1.315-2
.88
128mSn 50 6.50s 2090
1.505-1
.0004
128In 49 0.90s 6730
1.315-2
.12
.9989
.9996
128Sn 50 59.1m 853
1.505-1
.0016
129Pd 46
129Ag 47
7.24-7
129Cd 48 0.27s 4532
.0015
129mIn 49 1.26s 5116
2.53-2
.025
.975
129mSn 50 6.70m 2899
1.96-1
.106
1.0
2.6
129In 49 0.59s 4672
2.75-2
.9985
129Sn 50 2.16m 2713
2.30-1
.894
130Pd 46
6.79-11
130Ag 47
6.66-6
130Cd 48 0.48s 3486
8.78-2
.9903
130In 49 0.32s 6095
3.14-3
.82
.7
130mSn 50 3.72m 1424
5.40-1
130mIn 49 0.55s 6600
3.14-3
.0086
.0086
.0091
.0097
130mIn 49 0.055s 5035
3.14-3
.9914
130mSn 50 1.70m 2261
5.40-1
.16
.29

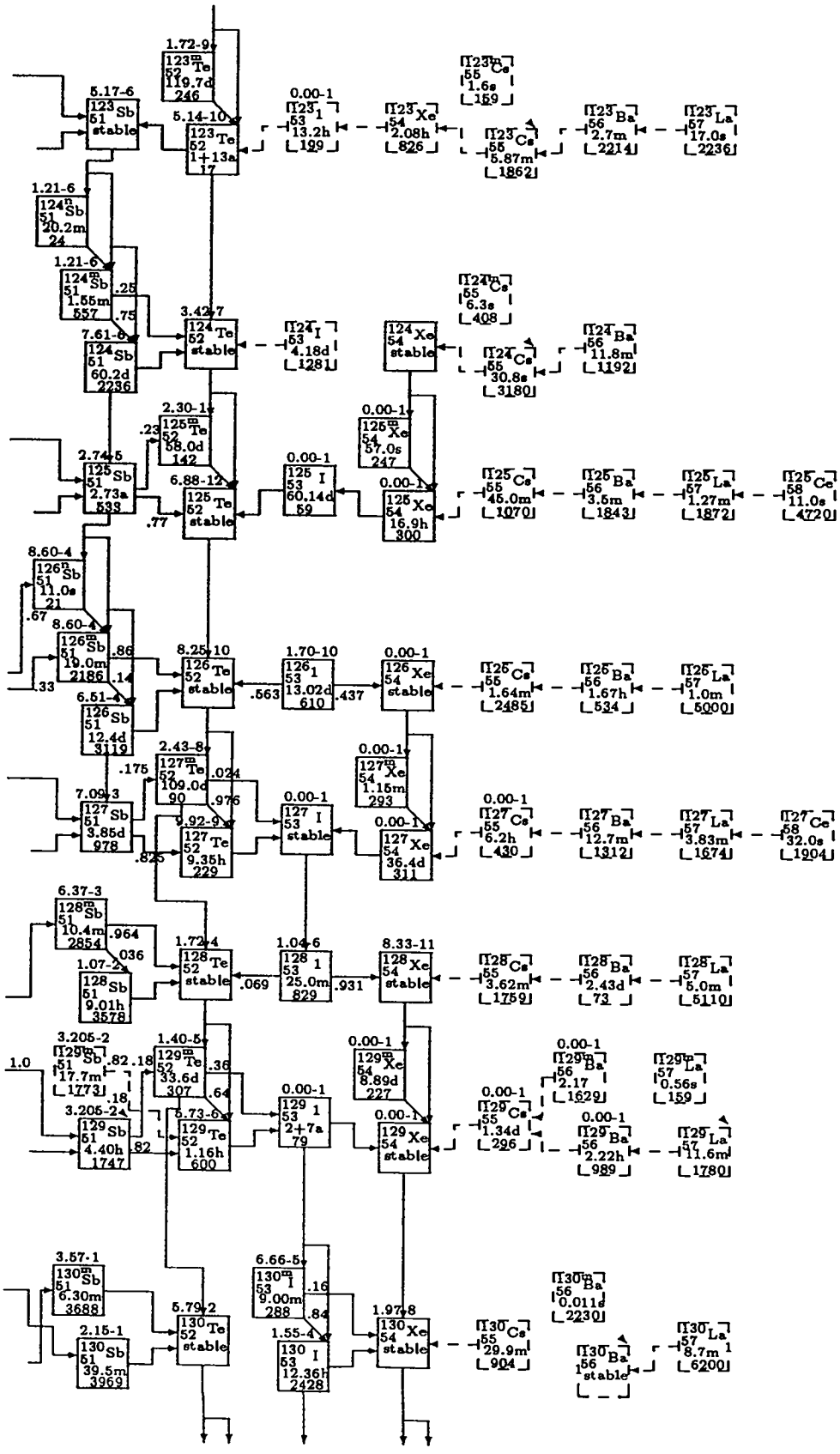
123mTe 52 119.7d 246
123Sb 51 stable
123Te 52 1+13a 17
123I 53 13.2h 199
123Xe 54 2.08h 826
123Cs 55 5.87m 1862
123Ba 56 2.7m 2214
123La 57 17.0s 2236
123mCs 55 1.6s 159
124mSb 51 20.2m 24
124mSb 51 1.55m 557
124Sb 51 60.2d 2236
124Te 52 stable
124I 53 4.18d 1281
124Xe 54 stable
124Cs 55 30.8s 3180
124Ba 56 11.8m 1192
124mCs 55 6.3s 408
125mTe 52 58.0d 142
125Sb 51 2.73a 539
125Te 52 stable
125I 53 60.14d 59
125Xe 54 16.9h 300
125mXe 54 57.0s 247
125Cs 55 45.0m 1070
125Ba 56 3.5m 1843
125La 57 1.27m 1872
125Ce 58 11.0s 4720
126mSb 51 19.0m 2186
126Sb 51 12.4d 3119
126Te 52 stable
126I 53 13.02d 610
126Xe 54 stable
126Cs 55 1.64m 2485
126Ba 56 1.67h 534
126La 57 1.0m 5000
126mSb 51 11.0s 21
127mTe 52 109.0d 90
127Sb 51 3.85d 978
127Te 52 9.35h 229
127I 53 stable
127Xe 54 36.4d 311
127mXe 54 1.15m 293
127Cs 55 6.2h 430
127Ba 56 12.7m 1312
127La 57 3.83m 1674
127Ce 58 32.0s 1904
128mSb 51 10.4m 2854
128Sb 51 9.01h 3578
128Te 52 stable
128I 53 25.0m 829
128Xe 54 stable
128Cs 55 3.62m 1759
128Ba 56 2.43d 73
128La 57 5.0m 5110
129mSb 51 17.7m 1773
129Sb 51 4.40h 1747
129Te 52 1.16h 600
129I 53 2+7a 79
129Xe 54 stable
129mXe 54 8.89d 227
129Cs 55 1.34d 296
129mBa 56 2.17 1629
129Ba 56 2.22h 989
129La 57 11.6m 1780
129mLa 57 0.56s 159
130mSb 51 6.30m 3688
130Sb 51 39.5m 3969
130Te 52 stable
130I 53 12.36h 2428
130mI 53 9.00m 288
130Xe 54 stable
130Cs 55 29.9m 904
130mBa 56 0.011s 2230
130Ba 56 stable
130La 57 8.7m 1 6200

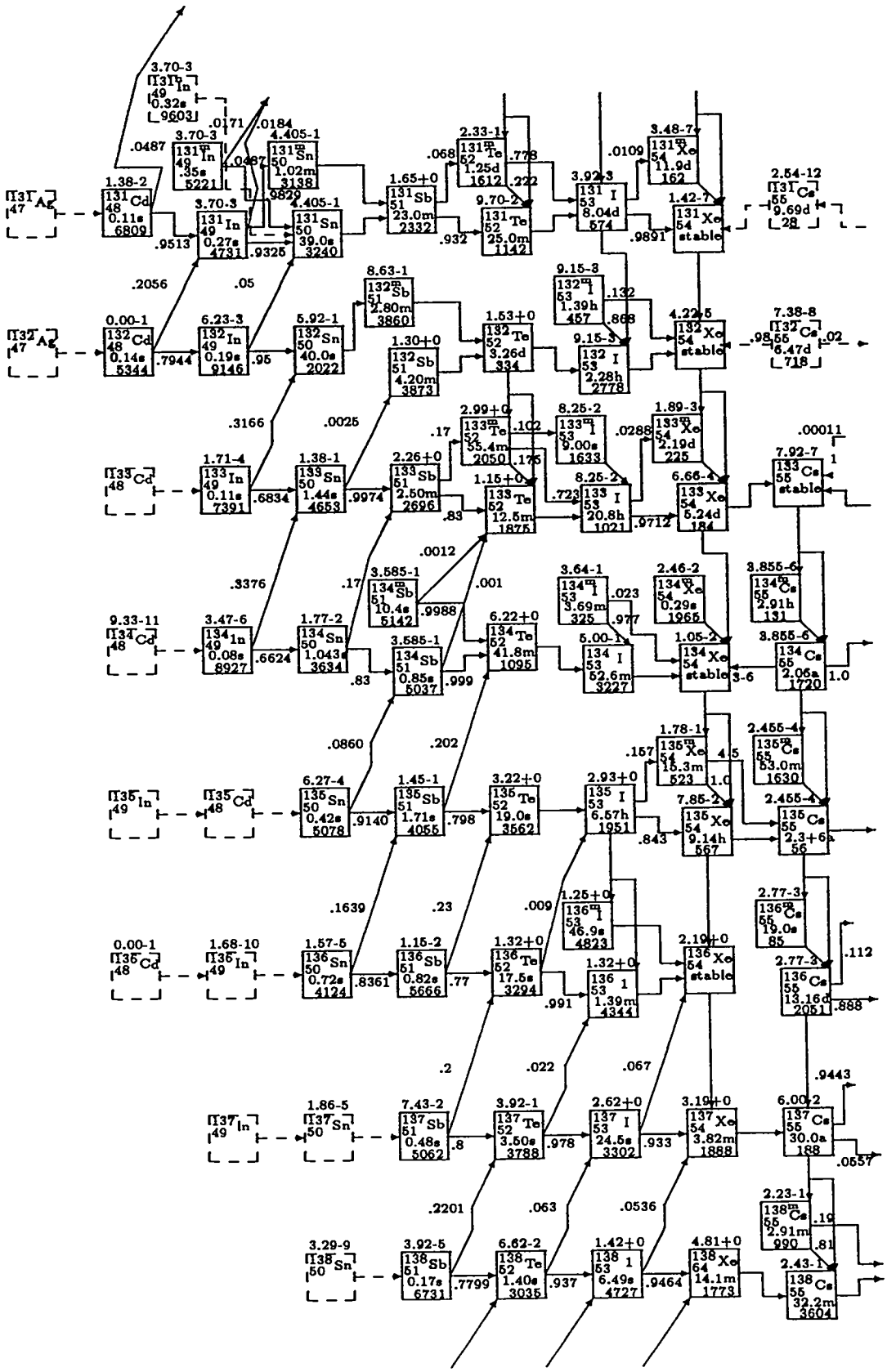
Ag 131 47
Cd 131 48 0.11s 6809
In 131 49 0.27s 4731
Sn 131 50 39.0s 3240
In 131m 49 .35s 5221
In 131 49 0.32s 9603
Sn 131m 50 1.02m 3138
Sb 131 51 23.0m 2332
Te 131m 52 1.25d 1612
Te 131 52 25.0m 1142
I 131 53 8.04d 574
Xe 131m 54 11.9d 162
Xe 131 54 stable
Cs 131 55 9.69d 28
Ag 132 47
Cd 132 48 0.14s 5344
In 132 49 0.19s 9146
Sn 132 50 40.0s 2022
Sb 132m 51 2.80m 3860
Sb 132 51 4.20m 3873
Te 132 52 3.26d 334
I 132m 53 1.39h 457
I 132 53 2.28h 2778
Xe 132 54 stable
Cs 132 55 6.47d 718
Cd 133 48
In 133 49 0.11s 7391
Sn 133 50 1.44s 4653
Sb 133 51 2.50m 2696
Te 133m 52 55.4m 2050
Te 133 52 12.5m 1875
I 133m 53 9.00s 1633
I 133 53 20.8h 1021
Xe 133m 54 2.19d 225
Xe 133 54 5.24d 184
Cs 133 55 stable
Cd 134 48
In 134 49 0.08s 8927
Sn 134 50 1.043s 3634
Sb 134m 51 10.4s 5142
Sb 134 51 0.85s 5037
Te 134 52 41.8m 1095
I 134m 53 3.69m 325
I 134 53 52.6m 3227
Xe 134m 54 0.29s 1965
Xe 134 54 stable
Cs 134m 55 2.91h 131
Cs 134 55 2.06a 1720
In 135 49
Cd 135 48
Sn 135 50 0.42s 5078
Sb 135 51 1.71s 4055
Te 135 52 19.0s 3562
I 135 53 6.57h 1951
Xe 135m 54 15.3m 523
Xe 135 54 9.14h 567
Cs 135m 55 53.0m 1630
Cs 135 55 2.3+6a 56
Cd 136 48
In 136 49
Sn 136 50 0.72s 4124
Sb 136 51 0.82s 5666
Te 136 52 17.5s 3294
I 136m 53 46.9s 4823
I 136 53 1.39m 4344
Xe 136 54 stable
Cs 136m 55 19.0s 85
Cs 136 55 13.16d 2051
In 137 49
Sn 137 50
Sb 137 51 0.48s 5062
Te 137 52 3.50s 3788
I 137 53 24.5s 3302
Xe 137 54 3.82m 1888
Cs 137 55 30.0a 188
Sn 138 50
Sb 138 51 0.17s 6731
Te 138 52 1.40s 3035
I 138 53 6.49s 4727
Xe 138 64 14.1m 1773
Cs 138m 55 2.91m 990
Cs 138 55 32.2m 3604

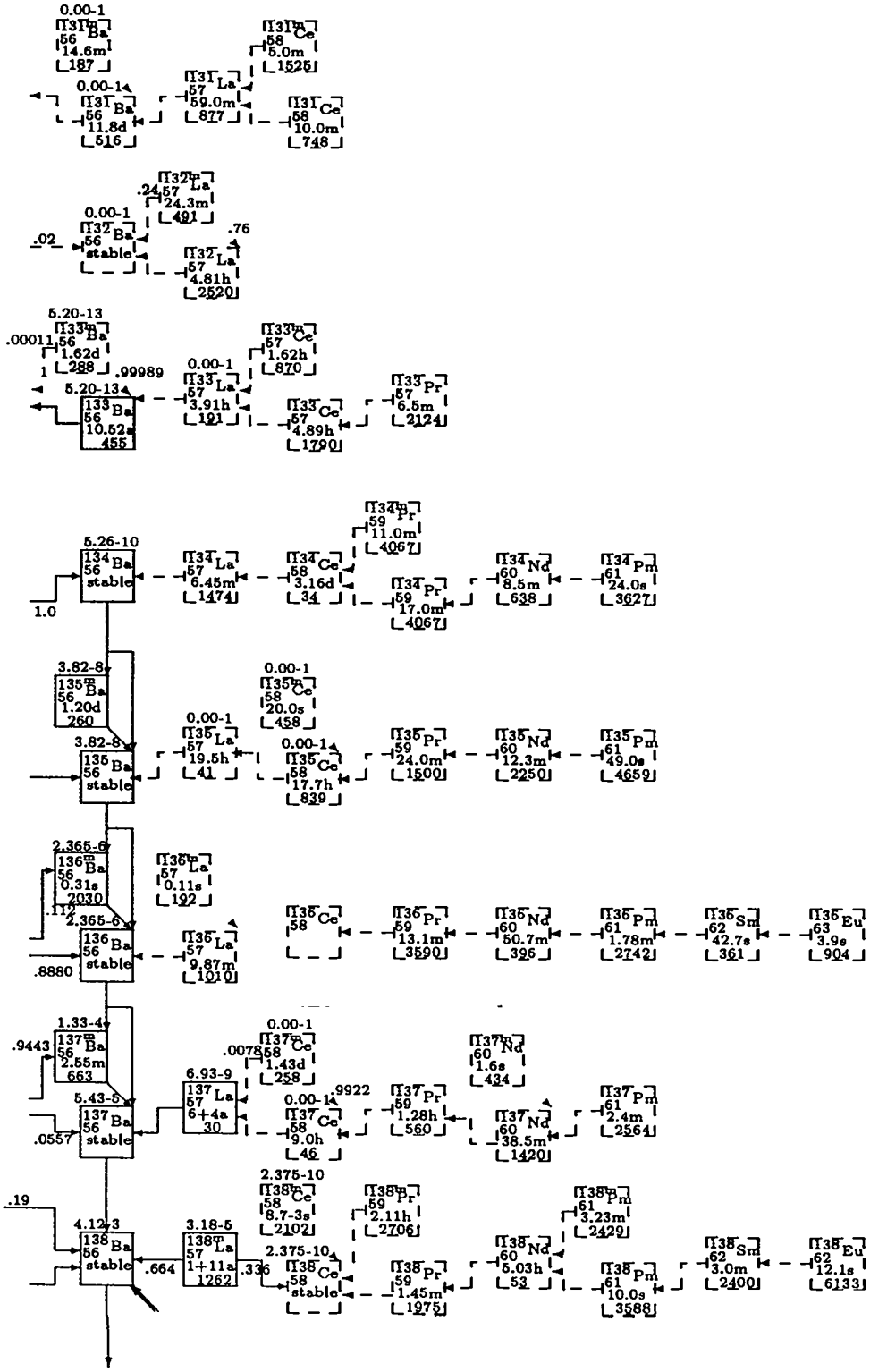
0.00-1
131mBa
56
14.6m
187
131Ce
58
5.0m
1525
131La
57
59.0m
877
0.00-1
131Ba
56
11.8d
516
131Ce
58
10.0m
748
132mLa
.24
57
24.3m
491
0.00-1
132Ba
56
stable
.02
.76
132La
57
4.81h
2520
5.20-13
133mBa
.00011
56
1.62d
288
133Ce
57
1.62h
870
0.00-1
1
.99989
133La
57
3.91h
191
5.20-13
133Ba
56
10.52a
455
133Ce
57
4.89h
1790
133Pr
57
6.5m
2124
134mPr
59
11.0m
4067
5.26-10
134Ba
56
stable
134La
57
6.45m
1474
134Ce
58
3.16d
34
134Pr
59
17.0m
4067
134Nd
60
8.5m
638
134Pm
61
24.0s
3627
1.0
3.82-8
135mBa
56
1.20d
260
0.00-1
135mCe
58
20.0s
458
0.00-1
135La
57
19.5h
41
3.82-8
135Ba
56
stable
0.00-1
135Ce
58
17.7h
839
135Pr
59
24.0m
1500
135Nd
60
12.3m
2250
135Pm
61
49.0s
4659
2.365-6
136mBa
56
0.31s
2030
136mLa
57
0.11s
192
.117
2.365-6
136Ba
56
stable
136La
57
9.87m
1010
136Ce
58
136Pr
59
13.1m
3590
136Nd
60
50.7m
396
136Pm
61
1.78m
2742
136Sm
62
42.7s
361
136Eu
63
3.9s
904
.8880
1.33-4
137mBa
.9443
56
2.55m
663
0.00-1
137mCe
.007858
1.43d
258
137Nd
60
1.6s
434
6.93-9
137La
57
6+4a
30
5.43-6
137Ba
56
stable
.0557
0.00-1
.9922
137Ce
58
9.0h
46
137Pr
59
1.28h
560
137Nd
60
38.5m
1420
137Pm
61
2.4m
2564
.19
2.375-10
138mCe
58
8.7-3s
2102
138mPr
59
2.11h
2706
138mPm
61
3.23m
2429
4.12-3
138Ba
56
stable
3.18-5
138La
57
1+11a
1262
.664
.336
2.375-10
138Ce
58
stable
138Pr
59
1.45m
1975
138Nd
60
5.03h
53
138Pm
61
10.0s
3588
138Sm
62
3.0m
2400
138Eu
62
12.1s
6133

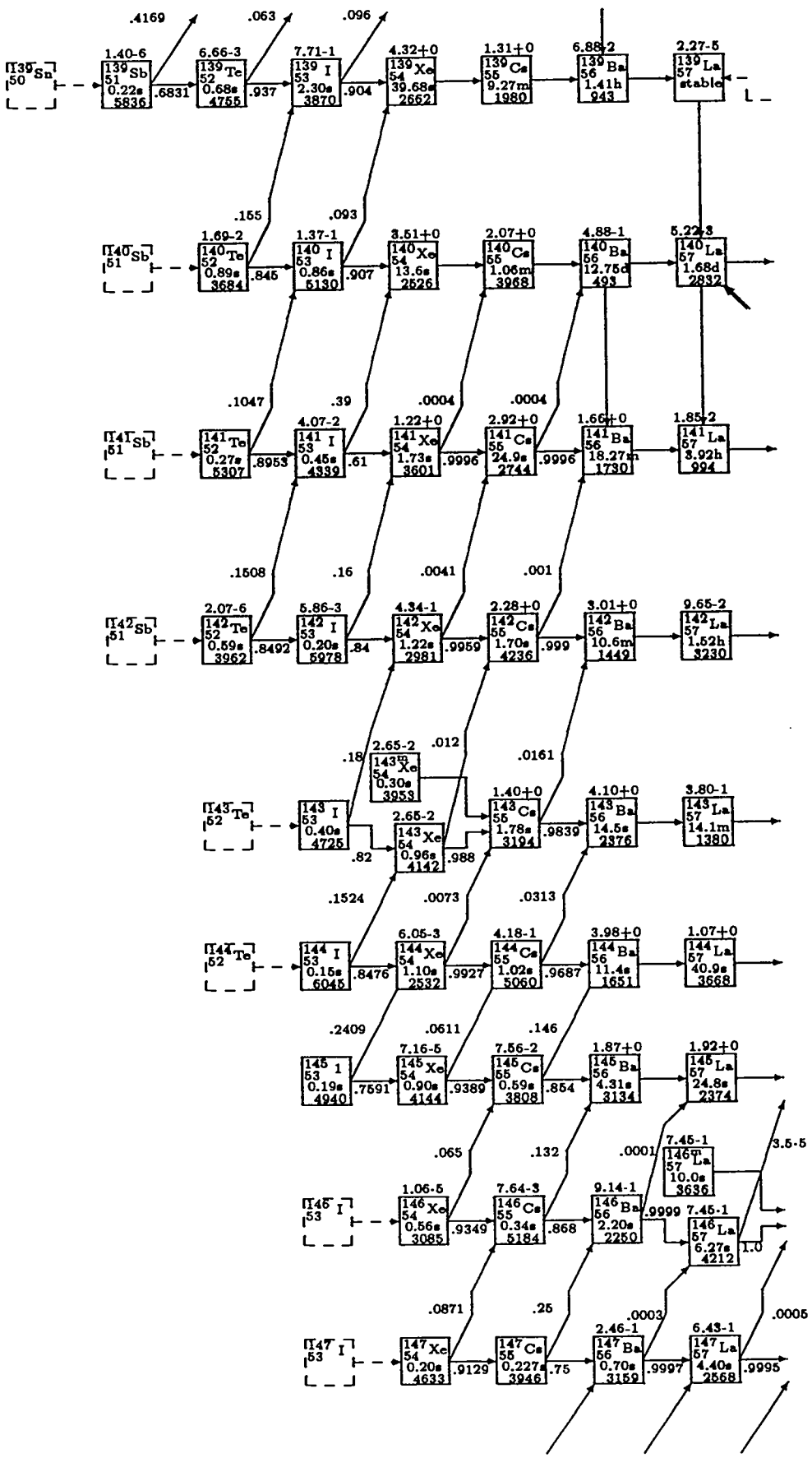
139Sn 50
1.40-6 139Sb 51 0.22s 5836
6.66-3 139Te 52 0.68s 4755
7.71-1 139 I 53 2.30s 3870
4.32+0 139Xe 54 39.68s 2662
1.31+0 139Cs 55 9.27m 1980
6.88-2 139Ba 56 1.41h 943
2.27-5 139La 57 stable
140Sb 51
1.69-2 140Te 52 0.89s 3684
1.37-1 140 I 53 0.86s 5130
3.51+0 140Xe 54 13.6s 2526
2.07+0 140Cs 55 1.06m 3968
4.88-1 140Ba 56 12.75d 493
5.22-3 140La 57 1.68d 2832
141Sb 51
141Te 52 0.27s 5307
4.07-2 141 I 53 0.45s 4939
1.22+0 141Xe 54 1.73s 3601
2.92+0 141Cs 55 24.9s 2744
1.66+0 141Ba 56 18.27m 1730
1.85-2 141La 57 3.92h 994
142Sb 51
2.07-6 142Te 52 0.59s 3962
5.86-3 142 I 53 0.20s 5978
4.34-1 142Xe 54 1.22s 2981
2.28+0 142Cs 55 1.70s 4236
3.01+0 142Ba 56 10.6m 1449
9.65-2 142La 57 1.52h 3230
143Te 52
143 I 53 0.40s 4725
2.65-2 143mXe 54 0.30s 3953
2.65-2 143Xe 54 0.96s 4142
1.40+0 143Cs 55 1.78s 3194
4.10+0 143Ba 56 14.5s 2376
3.80-1 143La 57 14.1m 1380
144Te 52
144 I 53 0.15s 6045
6.05-3 144Xe 54 1.10s 2532
4.18-1 144Cs 55 1.02s 5060
3.98+0 144Ba 56 11.4s 1651
1.07+0 144La 57 40.9s 3668
145 I 53 0.19s 4940
7.16-5 145Xe 54 0.90s 4144
7.56-2 145Cs 55 0.59s 3808
1.87+0 145Ba 56 4.31s 3134
1.92+0 145La 57 24.8s 2374
146 I 53
1.06-5 146Xe 54 0.56s 3085
7.64-3 146Cs 55 0.34s 5184
9.14-1 146Ba 56 2.20s 2250
7.45-1 146mLa 57 10.0s 3636
7.45-1 146La 57 6.27s 4212
147Xe 54 0.20s 4633
147Cs 55 0.227s 3946
2.46-1 147Ba 56 0.70s 3159
6.43-1 147La 57 4.40s 2568
.4169
.063
.096
.6831
.937
.904
.155
.093
.845
.907
.1047
.39
.0004
.0004
.8953
.61
.9996
.9996
.1508
.16
.0041
.001
.8492
.84
.9959
.999
.18
.012
.0161
.82
.988
.9839
.1524
.0073
.0313
.8476
.9927
.9687
.2409
.0611
.146
.7591
.9389
.854
.065
.132
.0001
3.5-5
.9349
.868
.9999
1.0
.0871
.25
.0003
.0005
.9129
.75
.9997
.9995

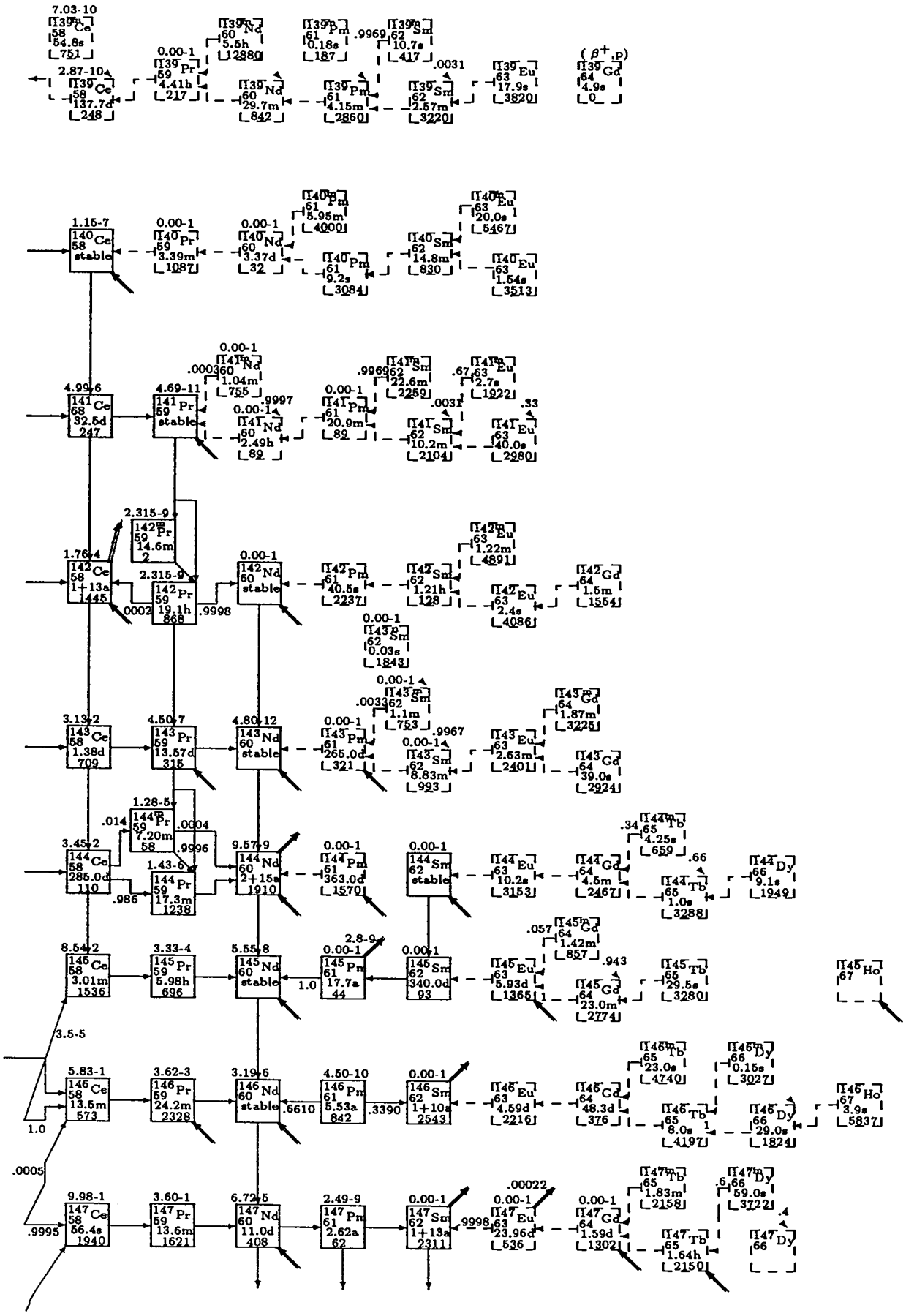
7.03-10
139 Ce 58 54.8s 751
2.87-10
139 Ce 58 137.7d 248
0.00-1
139 Pr 59 4.41h 217
139 Nd 60 5.5h 1288
139 Nd 60 29.7m 842
139 Pm 61 0.18s 187
139 Pm 61 4.15m 2860
.9969
139 Sm 62 10.7s 417
139 Sm 62 2.57m 3220
.0031
139 Eu 63 17.9s 3820
(β+,p)
139 Gd 64 4.9s 0
1.15-7
140 Ce 58 stable
0.00-1
140 Pr 59 3.39m 1087
0.00-1
140 Nd 60 3.37d 32
140 Pm 61 5.95m 4000
140 Pm 61 9.2s 3084
140 Sm 62 14.8m 830
140 Eu 63 20.0s 5467
140 Eu 63 1.54s 3513
4.99-6
141 Ce 58 32.5d 247
4.69-11
141 Pr 59 stable
0.00-1
141 Nd 60 1.04m 755
.000360
.9997
0.00-1
141 Nd 60 2.49h 89
0.00-1
141 Pm 61 20.9m 89
.9969
141 Sm 62 22.6m 2259
.0031
141 Sm 62 10.2m 2104
.67
141 Eu 63 2.7s 1922
.33
141 Eu 63 40.0s 2980
2.315-9
142m Pr 59 14.6m 2
1.76-4
142 Ce 58 1+13a 1445
2.315-9
142 Pr 59 19.1h 868
.0002
.9998
0.00-1
142 Nd 60 stable
142 Pm 61 40.5s 2237
142 Sm 62 1.21h 128
142 Eu 63 1.22m 4891
142 Eu 63 2.4s 4086
142 Gd 64 1.5m 1554
0.00-1
143 Sm 62 0.03s 1843
3.13-2
143 Ce 58 1.38d 709
4.50-7
143 Pr 59 13.57d 315
4.80-12
143 Nd 60 stable
0.00-1
143 Pm 61 265.0d 321
0.00-1
143 Sm 62 1.1m 753
.003362
.9967
0.00-1
143 Sm 62 8.83m 993
143 Eu 63 2.63m 2401
143 Gd 64 1.87m 3225
143 Gd 64 39.0s 2924
1.28-5
144m Pr 59 7.20m 58
.014
.0004
.9996
3.45-2
144 Ce 58 285.0d 110
.986
1.43-6
144 Pr 59 17.3m 1238
9.57-9
144 Nd 60 2+15a 1910
0.00-1
144 Pm 61 363.0d 1570
0.00-1
144 Sm 62 stable
144 Eu 63 10.2s 3153
144m Tb 65 4.25s 659
.34
.66
144 Gd 64 4.5m 2467
144 Tb 65 1.0s 3288
144 Dy 66 9.1s 1949
8.54-2
145 Ce 58 3.01m 1536
3.33-4
145 Pr 59 5.98h 696
5.55-8
145 Nd 60 stable
2.8-9
0.00-1
145 Pm 61 17.7a 44
1.0
0.00-1
145 Sm 62 340.0d 93
145m Gd 64 1.42m 857
.057
.943
145 Eu 63 5.93d 1365
1
145 Gd 64 23.0m 2774
145 Tb 65 29.5s 3280
145 Ho 67
3.5-5
5.83-1
146 Ce 58 13.5m 573
3.62-3
146 Pr 59 24.2m 2328
3.19-6
146 Nd 60 stable
.6610
4.50-10
146 Pm 61 5.53a 842
.3390
0.00-1
146 Sm 62 1+10a 2543
146 Eu 63 4.59d 2216
146m Tb 65 23.0s 4740
146 Dy 66 0.15s 3027
146 Gd 64 48.3d 376
146 Tb 65 8.0s 1 4197
146 Dy 66 29.0s 1824
146 Ho 67 3.9s 5837
1.0
.0005
9.98-1
147 Ce 58 56.4s 1940
3.60-1
147 Pr 59 13.6m 1621
6.72-5
147 Nd 60 11.0d 408
2.49-9
147 Pm 61 2.62a 62
0.00-1
147 Sm 62 1+13a 2311
.9995
.9998
.00022
0.00-1
147 Eu 63 23.96d 536
0.00-1
147 Gd 64 1.59d 1302
147m Tb 65 1.83m 2158
147 Dy 66 59.0s 3722
.6
.4
147 Tb 65 1.64h 2150
147 Dy 66

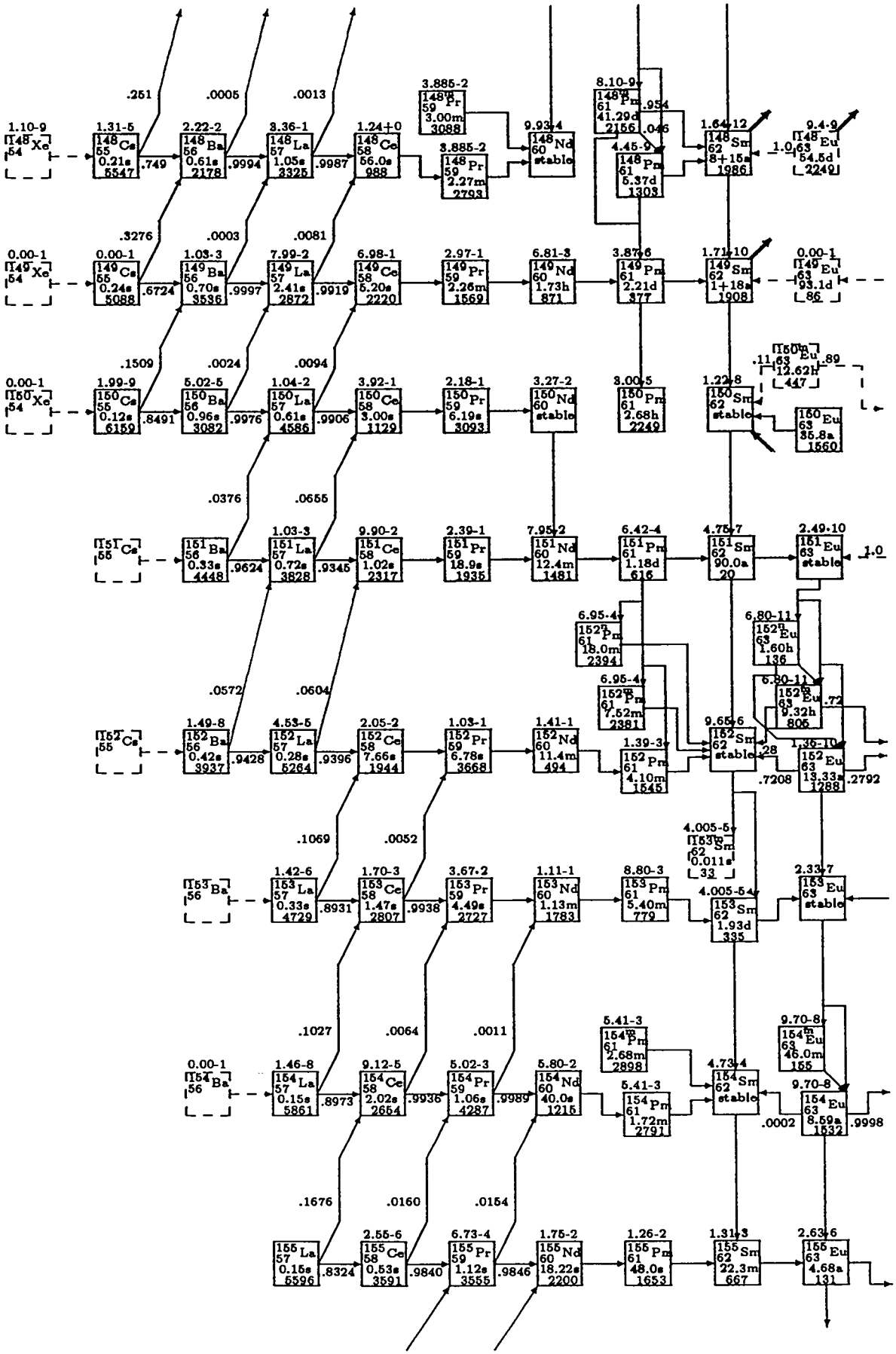
1.10-9
148Xe 54
1.31-5
148Cs 55 0.21s 5547
.749
2.22-2
148Ba 56 0.61s 2178
.9994
3.36-1
148La 57 1.05s 3325
.9987
1.24+0
148Ce 58 56.0s 988
.251
.0005
.0013
3.885-2
148Pr 59 3.00m 3088
3.885-2
148Pr 59 2.27m 2793
9.93+4
148Nd 60 stable
8.10-9
148Pm 61 41.29d 2156
.954
.046
4.45-9
148Pm 61 5.37d 1303
1.64+12
148Sm 62 8+15a 1986
1.0
9.4-9
148Eu 63 54.5d 2249
0.00-1
149Xe 54
0.00-1
149Cs 55 0.24s 5088
.6724
1.03-3
149Ba 56 0.70s 3536
.9997
7.99-2
149La 57 2.41s 2872
.9919
6.98-1
149Ce 58 5.20s 2220
2.97-1
149Pr 59 2.26m 1569
6.81-3
149Nd 60 1.73h 871
3.87+6
149Pm 61 2.21d 377
1.71+10
149Sm 62 1+18a 1908
0.00-1
149Eu 63 93.1d 86
.3276
.0003
.0081
.1509
.0024
.0094
0.00-1
150Xe 54
1.99-9
150Cs 55 0.12s 6159
.8491
5.02-5
150Ba 56 0.96s 3082
.9976
1.04-2
150La 57 0.61s 4586
.9906
3.92-1
150Ce 58 3.00s 1129
2.18-1
150Pr 59 6.19s 3093
3.27-2
150Nd 60 stable
3.00+5
150Pm 61 2.68h 2249
1.22+8
150Sm 62 stable
150mEu 63 12.62h 447
.11
.89
150Eu 63 35.8a 1560
.0376
.0655
151Cs 55
1.03-3
151Ba 56 0.33s 4448
.9624
9.90-2
151La 57 0.72s 3828
.9345
2.39-1
151Ce 58 1.02s 2317
7.95+2
151Pr 59 18.9s 1935
6.42-4
151Nd 60 12.4m 1481
4.75+7
151Pm 61 1.18d 616
2.49-10
151Sm 62 90.0a 20
151Eu 63 stable
1.0
6.95-4
152mPm 61 13.0m 2394
6.80-11
152mEu 63 1.60h 136
6.95-4
152gPm 61 7.52m 2381
6.80-11
152gEu 63 9.32h 805
.72
.0572
.0604
152Cs 55
1.49-8
152Ba 56 0.42s 3937
.9428
4.53-5
152La 57 0.28s 5264
.9396
2.05-2
152Ce 58 7.66s 1944
1.03-1
152Pr 59 6.78s 3668
1.41-1
152Nd 60 11.4m 494
1.39-3
152Pm 61 4.10m 1545
9.65+6
152Sm 62 stable
.28
1.35-10
152Eu 63 13.33a 1288
.7208
.2792
4.005-5
153mSm 62 0.011s 33
.1069
.0052
153Ba 56
1.42-6
153La 57 0.33s 4729
.8931
1.70-3
153Ce 58 1.47s 2807
.9938
3.67-2
153Pr 59 4.49s 2727
1.11-1
153Nd 60 1.13m 1783
8.80-3
153Pm 61 5.40m 779
4.005-5
153Sm 62 1.93d 335
2.33+7
153Eu 63 stable
.1027
.0064
.0011
5.41-3
154mPm 61 2.68m 2898
9.70-8
154mEu 63 46.0m 155
0.00-1
154Ba 56
1.46-8
154La 57 0.15s 5861
.8973
9.12-5
154Ce 58 2.02s 2654
.9936
5.02-3
154Pr 59 1.06s 4287
.9989
5.80-2
154Nd 60 40.0s 1215
5.41-3
154Pm 61 1.72m 2791
4.73+4
154Sm 62 stable
9.70-8
154Eu 63 8.59a 1532
.0002
.9998
.1676
.0160
.0154
155La 57 0.15s 5596
.8324
2.55-6
155Ce 58 0.53s 3591
.9840
6.73-4
155Pr 59 1.12s 3555
.9846
1.75-2
155Nd 60 18.22s 2200
1.26-2
155Pm 61 48.0s 1653
1.31+3
155Sm 62 22.3m 667
2.63+6
155Eu 63 4.68a 131

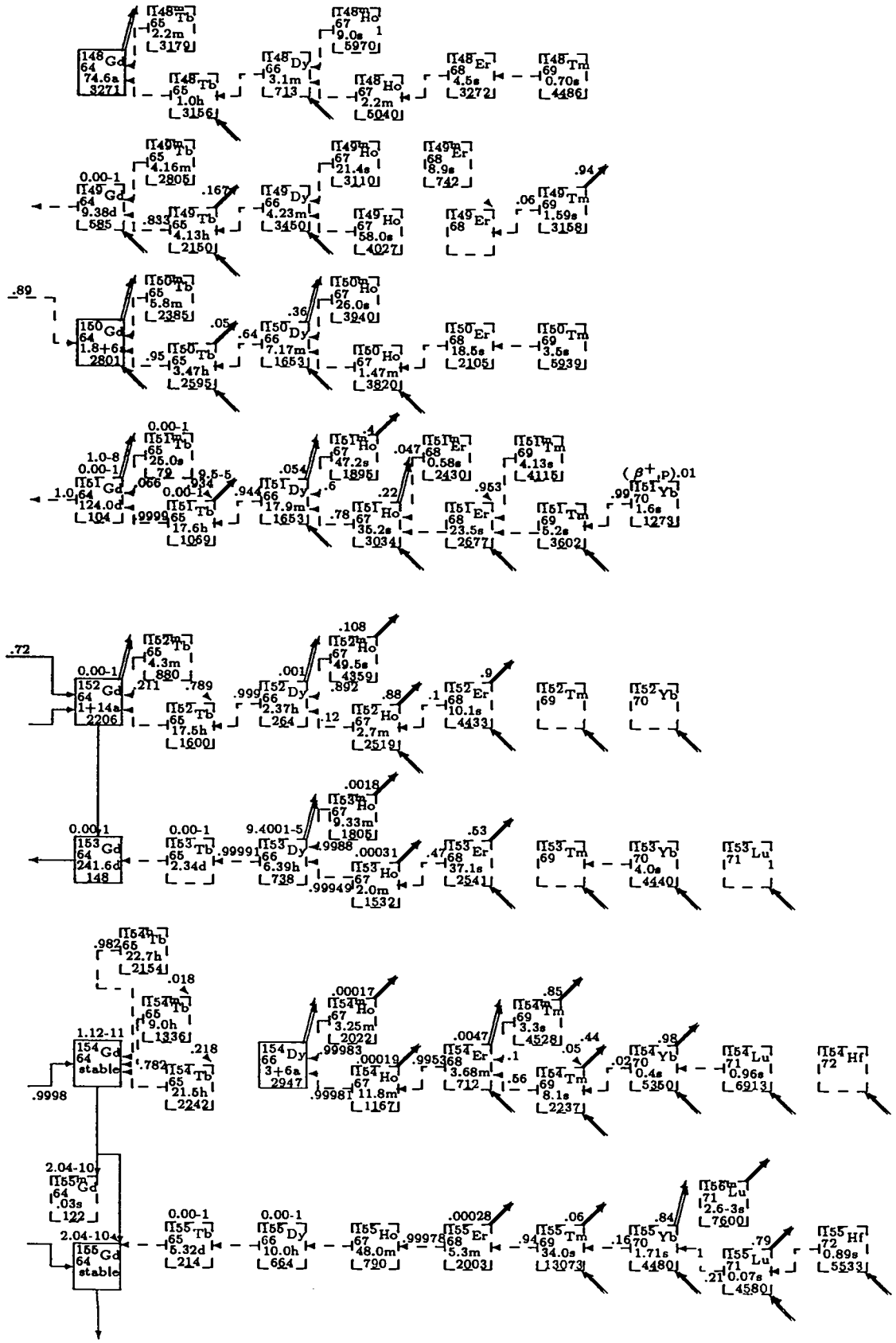

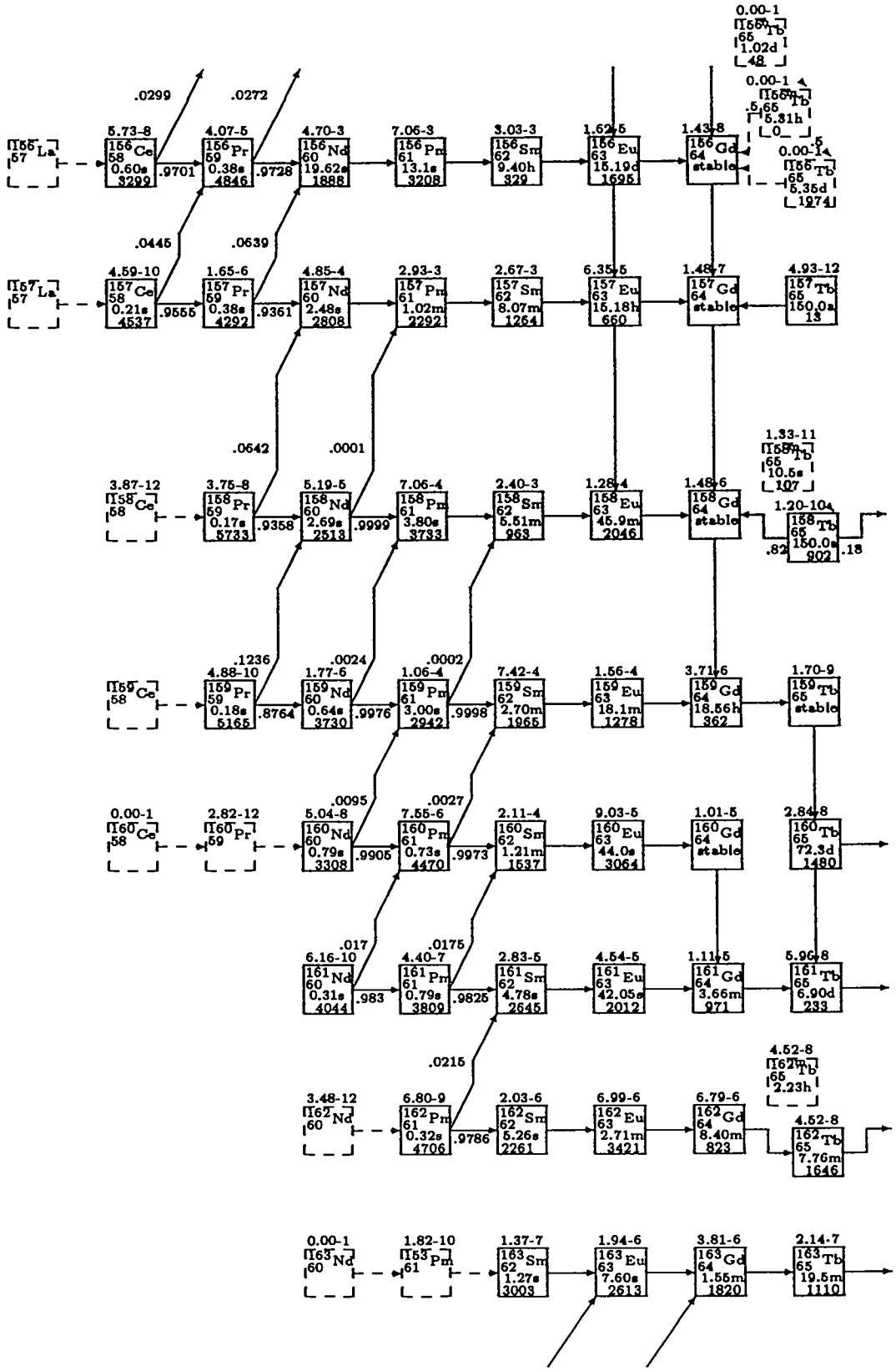
155La 57
155Ce 58 0.60s 3299
156Ce 58 0.60s 3299
156Pr 59 0.38s 4846
156Nd 60 19.62s 1888
156Pm 61 13.1s 3208
156Sm 62 9.40h 329
156Eu 63 15.19d 1695
156Gd 64 stable
156Tb 65 1.02d 48
156Tb 65 5.31h 0
156Tb 65 5.35d 1274
157La 57
157Ce 58 0.21s 4537
157Pr 59 0.38s 4292
157Nd 60 2.48s 2808
157Pm 61 1.02m 2292
157Sm 62 8.07m 1264
157Eu 63 15.18h 660
157Gd 64 stable
157Tb 65 150.0a 13
158Ce 58
158Pr 59 0.17s 5733
158Nd 60 2.69s 2513
158Pm 61 3.80s 3733
158Sm 62 5.51m 963
158Eu 63 45.9m 2046
158Gd 64 stable
158Tb 65 10.5s 107
158Tb 65 150.0a 902
159Ce 58
159Pr 59 0.18s 5165
159Nd 60 0.64s 3730
159Pm 61 3.00s 2942
159Sm 62 2.70m 1965
159Eu 63 18.1m 1278
159Gd 64 18.56h 362
159Tb 65 stable
160Ce 58
160Pr 59
160Nd 60 0.79s 3308
160Pm 61 0.73s 4470
160Sm 62 1.21m 1537
160Eu 63 44.0s 3064
160Gd 64 stable
160Tb 65 72.3d 1480
161Nd 60 0.31s 4044
161Pm 61 0.79s 3809
161Sm 62 4.78s 2645
161Eu 63 42.05s 2012
161Gd 64 3.66m 971
161Tb 65 6.90d 233
162Nd 60
162Pm 61 0.32s 4706
162Sm 62 5.26s 2261
162Eu 63 2.71m 3421
162Gd 64 8.40m 823
162Tb 65 7.76m 1646
162Tb 65 2.23h
163Nd 60
163Pm 61
163Sm 62 1.27s 3003
163Eu 63 7.60s 2613
163Gd 64 1.55m 1820
163Tb 65 19.5m 1110
.0299
.0272
.0445
.0639
.9701
.9728
.9555
.9361
.0642
.0001
.9358
.9999
.1236
.0024
.0002
.8764
.9976
.9998
.0095
.0027
.9905
.9973
.017
.0175
.983
.9825
.0215
.9786
.82
.18

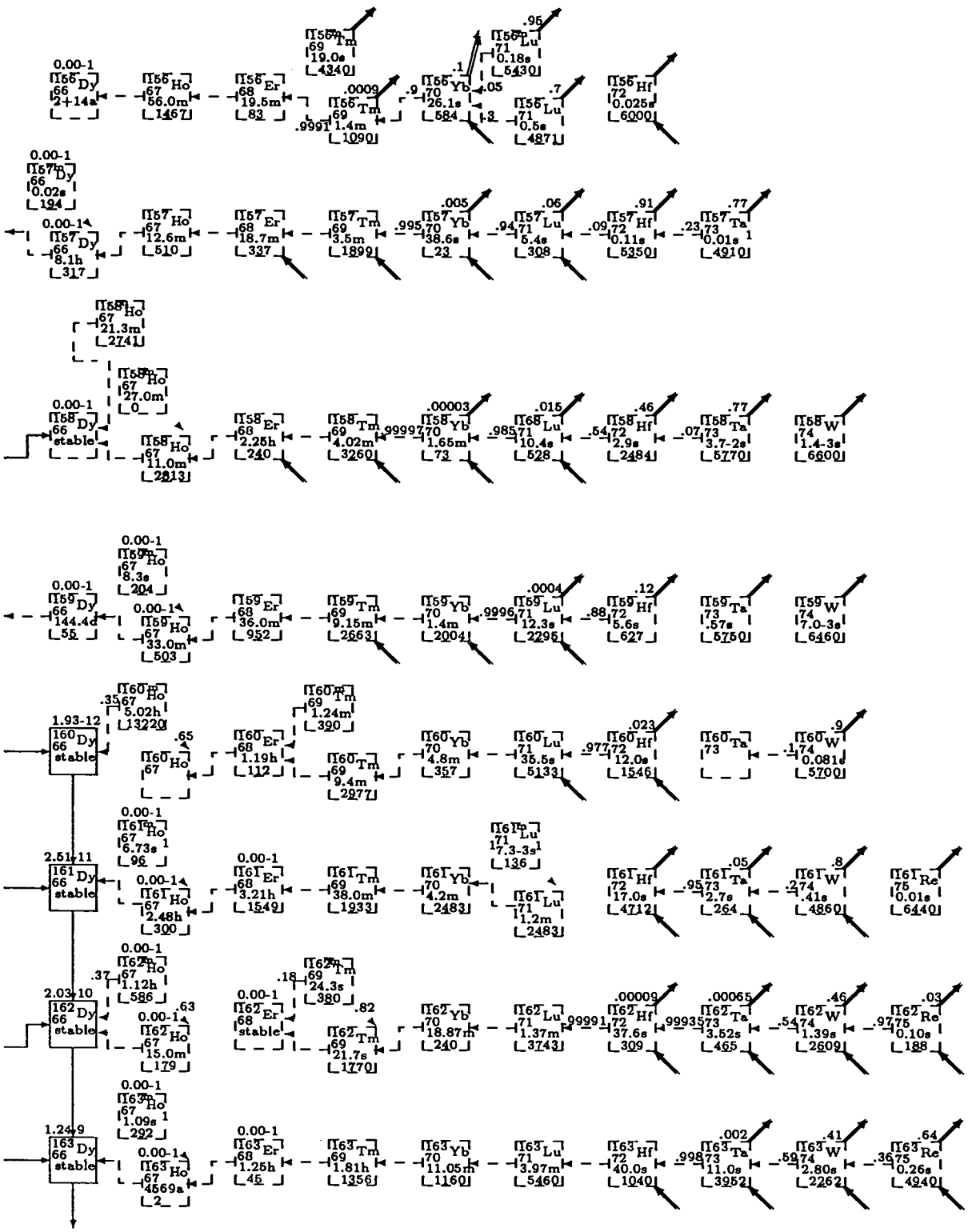

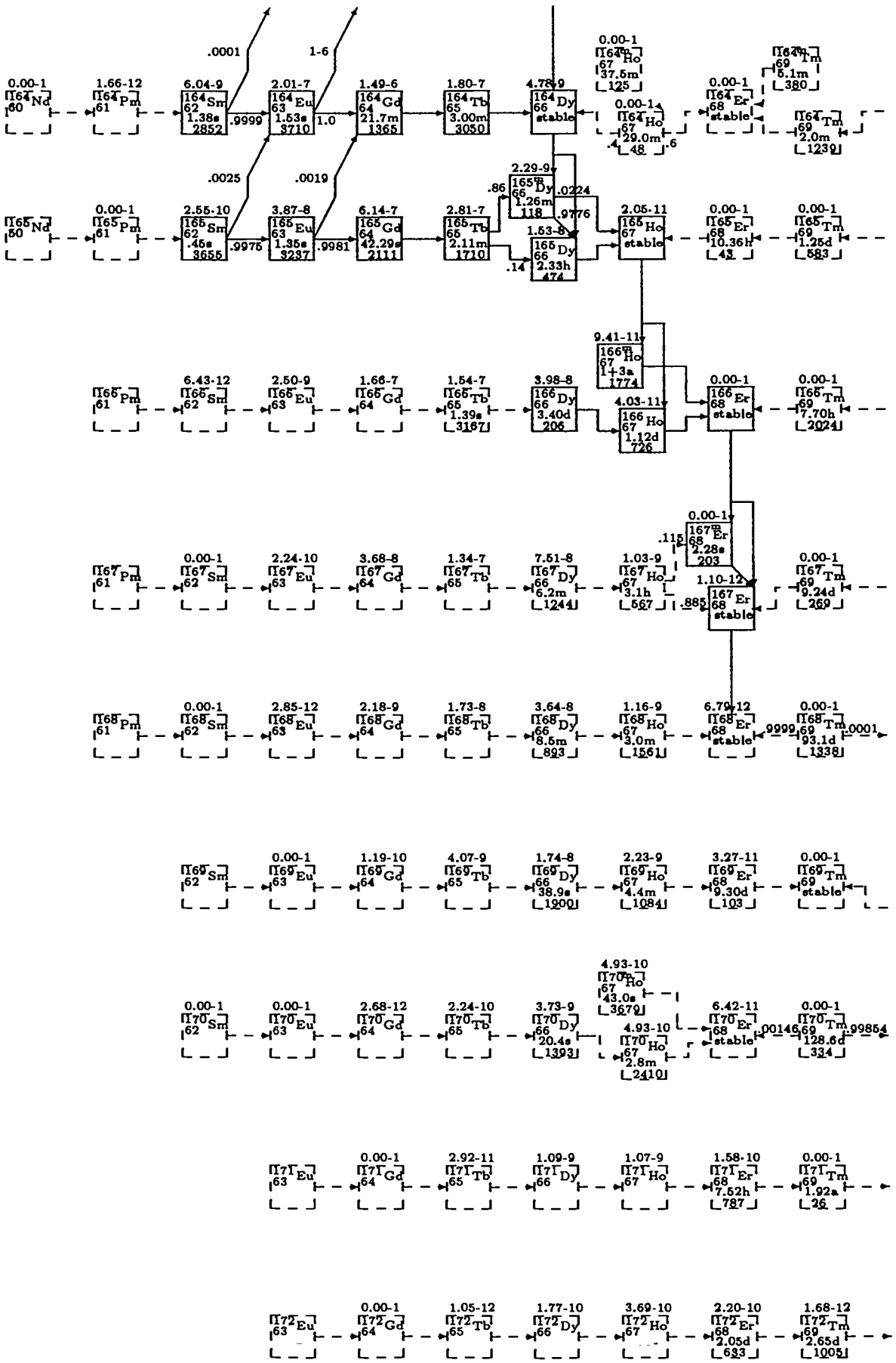
0.00-1 164 Nd 60
1.66-12 164 Pm 61
6.04-9 164 Sm 62 1.38s 2852
2.01-7 164 Eu 63 1.53s 3710
1.49-6 164 Gd 64 21.7m 1365
1.80-7 164 Tb 65 3.00m 3050
4.78-9 164 Dy 66 stable
0.00-1 164 Ho 67 37.5m 125
0.00-1 164 Ho 67 29.0m 48
0.00-1 164 Er 68 stable
164m Tm 69 5.1m 380
164 Tm 69 2.0m 1239
.0001
1-6
.9999
1.0
.0025
.0019
.4
.6
0.00-1 165 Nd 60
0.00-1 165 Pm 61
2.55-10 165 Sm 62 .45s 3655
3.87-8 165 Eu 63 1.35s 3237
6.14-7 165 Gd 64 42.29s 2111
2.81-7 165 Tb 65 2.11m 1710
2.29-9 165m Dy 66 1.26m 118
1.53-8 165 Dy 66 2.33h 474
2.05-11 165 Ho 67 stable
0.00-1 165 Er 68 10.36h 43
0.00-1 165 Tm 69 1.25d 583
.86
.14
.0224
.9776
.9975
.9981
9.41-11 166m Ho 67 1+3a 1774
6.43-12 166 Pm 61
2.50-9 166 Sm 62
1.66-7 166 Eu 63
1.54-7 166 Gd 64
1.39s 3167
3.98-8 166 Tb 65
3.40d 206
4.03-11 166 Dy 66
1.12d 726
166 Ho 67
0.00-1 166 Er 68 stable
0.00-1 166 Tm 69 7.70h 2024
0.00-1 167m Er 68 2.28s 203
.115
.885
1.10-12 167 Er 68 stable
167 Pm 61
0.00-1 167 Sm 62
2.24-10 167 Eu 63
3.68-8 167 Gd 64
1.34-7 167 Tb 65
7.51-8 167 Dy 66 6.2m 1244
1.03-9 167 Ho 67 3.1h 567
0.00-1 167 Tm 69 9.24d 269
168 Pm 61
0.00-1 168 Sm 62
2.85-12 168 Eu 63
2.18-9 168 Gd 64
1.73-8 168 Tb 65
3.64-8 168 Dy 66 8.5m 893
1.16-9 168 Ho 67 3.0m 1561
6.79-12 168 Er 68 stable
0.00-1 168 Tm 69 93.1d 1338
.9999
.0001
169 Sm 62
0.00-1 169 Eu 63
1.19-10 169 Gd 64
4.07-9 169 Tb 65
1.74-8 169 Dy 66 38.9s 1900
2.23-9 169 Ho 67 4.4m 1084
3.27-11 169 Er 68 9.30d 103
0.00-1 169 Tm 69 stable
4.93-10 170m Ho 67 43.0s 3679
0.00-1 170 Sm 62
0.00-1 170 Eu 63
2.68-12 170 Gd 64
2.24-10 170 Tb 65
3.73-9 170 Dy 66 20.4s 1393
4.93-10 170 Ho 67 2.8m 2410
6.42-11 170 Er 68 stable
0.00-1 170 Tm 69 128.6d 334
.00146
.99854
171 Eu 63
0.00-1 171 Gd 64
2.92-11 171 Tb 65
1.09-9 171 Dy 66
1.07-9 171 Ho 67
1.58-10 171 Er 68 7.52h 787
0.00-1 171 Tm 69 1.92a 26
172 Eu 63
0.00-1 172 Gd 64
1.05-12 172 Tb 65
1.77-10 172 Dy 66
3.69-10 172 Ho 67
2.20-10 172 Er 68 2.05d 633
1.68-12 172 Tm 69 2.65d 1005

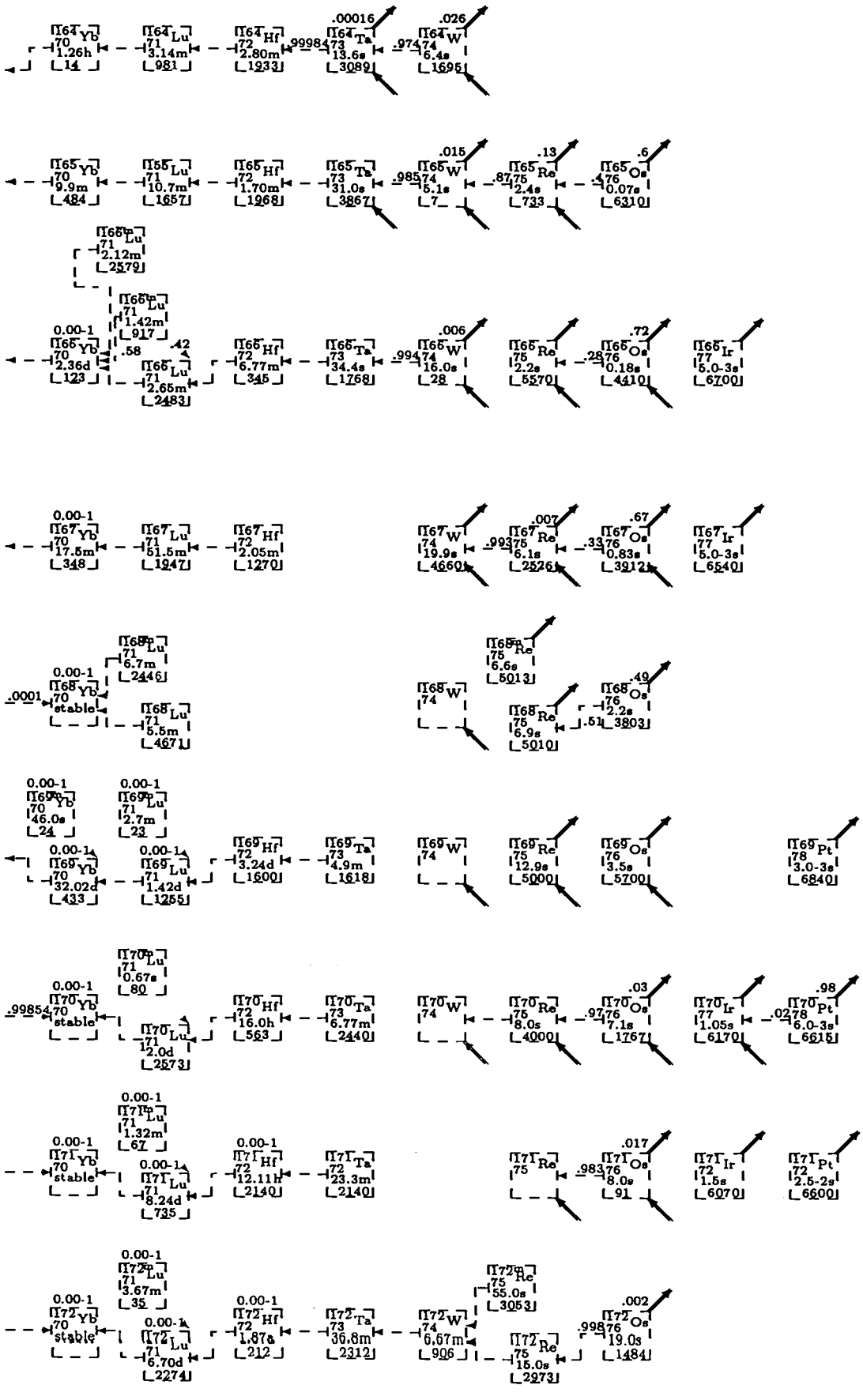
164Yb 70 1.26h 14
164Lu 71 3.14m 981
164Hf 72 2.80m 1933
.9998 164Ta 73 13.6s 3089
.00016
.974 164W 74 6.4s 1695
.026
165Yb 70 9.9m 484
165Lu 71 10.7m 1657
165Hf 72 1.70m 1968
165Ta 73 31.0s 3867
.985 165W 74 5.1s 7
.015
.87 165Re 75 2.4s 733
.13
.4 165Os 76 0.07s 6310
.6
166mLu 71 2.12m 2579
166gLu 71 1.42m 917
0.00-1
166Yb 70 2.36d 123
.58
.42
166Lu 71 2.65m 2483
166Hf 72 6.77m 345
166Ta 73 34.4s 1768
.994 166W 74 16.0s 28
.006
.28 166Re 75 2.2s 5570
166Os 76 0.18s 4410
.72
166Ir 77 5.0-3s 6700
0.00-1
167Yb 70 17.5m 348
167Lu 71 51.5m 1947
167Hf 72 2.05m 1270
167W 74 19.9s 4660
.993 167Re 75 6.1s 2526
.007
.33 167Os 76 0.83s 3912
.67
167Ir 77 5.0-3s 6540
168mLu 71 6.7m 2446
0.00-1
.0001 168Yb 70 stable
168Lu 71 5.5m 4671
168W 74
168mRe 75 6.6s 5013
168Re 75 6.9s 5010
.51
168Os 76 2.2s 3803
.49
0.00-1
169mYb 70 46.0s 24
169mLu 71 2.7m 23
0.00-1
169Yb 70 32.02d 433
0.00-1
169Lu 71 1.42d 1255
169Hf 72 3.24d 1600
169Ta 73 4.9m 1618
169W 74
169Re 75 12.9s 5000
169Os 76 3.5s 5700
169Pt 78 3.0-3s 6840
170mLu 71 0.67s 80
0.00-1
.9985 170Yb 70 stable
170Lu 71 2.0d 2573
170Hf 72 16.0h 563
170Ta 73 6.77m 2440
170W 74
170Re 75 8.0s 4000
.97 170Os 76 7.1s 1767
.03
170Ir 77 1.05s 6170
.02 170Pt 78 6.0-3s 6615
.98
0.00-1
171mLu 71 1.32m 67
0.00-1
171Yb 70 stable
0.00-1
171Lu 71 8.24d 735
0.00-1
171Hf 72 12.11h 2140
171Ta 72 23.3m 2140
171Re 75
.983 171Os 76 8.0s 91
.017
171Ir 72 1.5s 6070
171Pt 72 2.5-2s 6600
0.00-1
172mLu 71 3.67m 35
0.00-1
172Yb 70 stable
0.00-1
172Lu 71 6.70d 2274
0.00-1
172Hf 72 1.87a 212
172Ta 73 36.8m 2312
172W 74 6.67m 906
172mRe 75 55.0s 3053
172Re 75 15.0s 2973
.998 172Os 76 19.0s 1484
.002

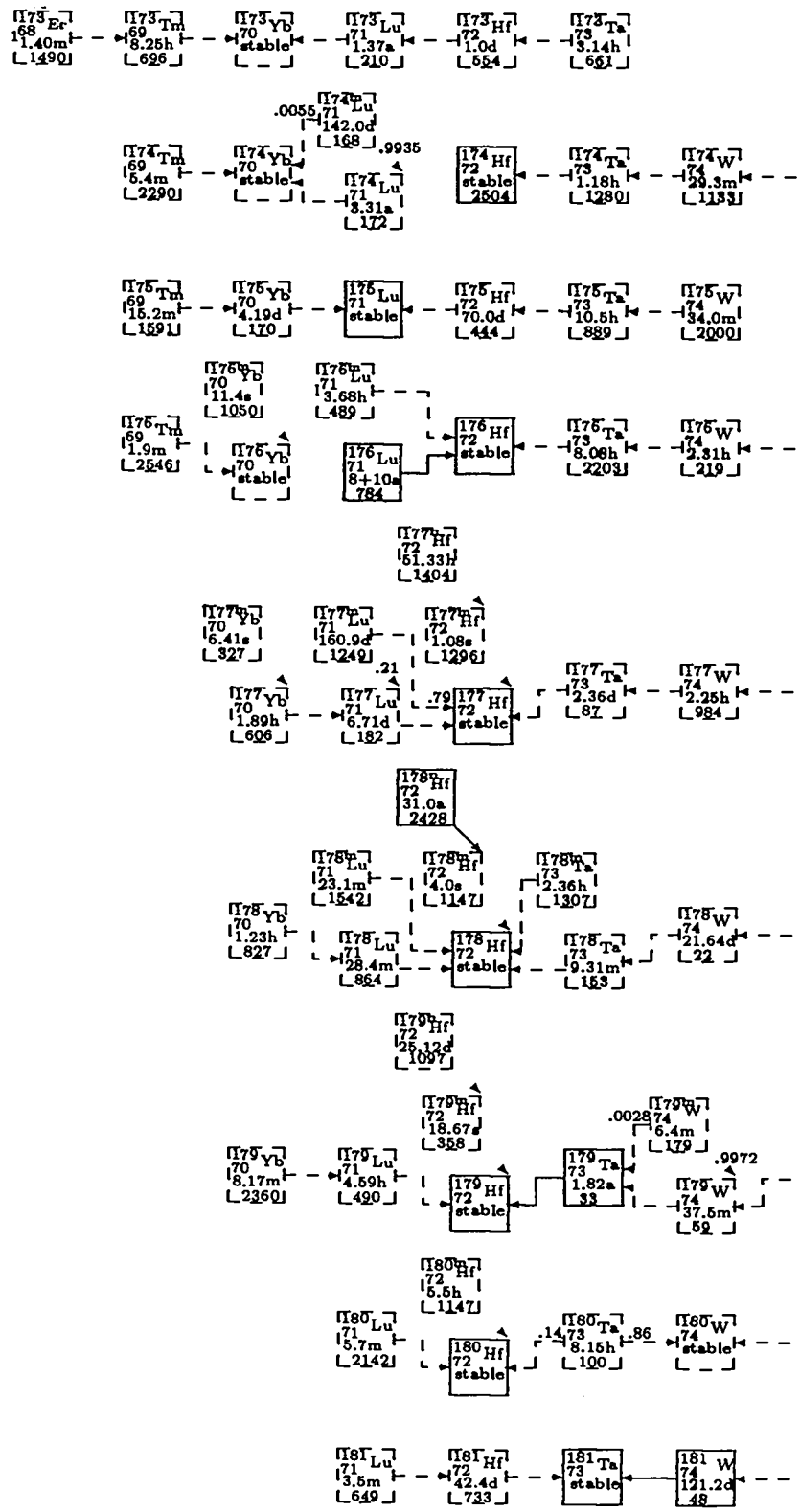
173 Er 68 1.40m 1490
173 Tm 69 8.25h 626
173 Yb 70 stable
173 Lu 71 1.37a 210
173 Hf 72 1.0d 554
173 Ta 73 3.14h 661
174m Lu 71 142.0d 168
.0055
.9935
174 Tm 69 5.4m 2290
174 Yb 70 stable
174 Lu 71 3.31a 172
174 Hf 72 stable 2504
174 Ta 73 1.18h 1280
174 W 74 29.3m 1131
175 Tm 69 15.2m 1591
175 Yb 70 4.19d 170
175 Lu 71 stable
175 Hf 72 70.0d 444
175 Ta 73 10.5h 889
175 W 74 34.0m 2000
176m Yb 70 11.4s 1050
176m Lu 71 3.68h 489
176 Tm 69 1.9m 2546
176 Yb 70 stable
176 Lu 71 8+10a 784
176 Hf 72 stable
176 Ta 73 8.08h 2203
176 W 74 2.31h 219
177m Hf 72 51.33h 1404
177m Yb 70 6.41s 327
177m Lu 71 160.9d 1249
177m Hf 72 1.08s 1296
177 Yb 70 1.89h 606
177 Lu 71 6.71d 182
.21
.79
177 Hf 72 stable
177 Ta 73 2.36d 87
177 W 74 2.25h 984
178m Hf 72 31.0a 2428
178m Lu 71 23.1m 1542
178m Hf 72 4.0s 1147
178m Ta 73 2.36h 1307
178 Yb 70 1.23h 827
178 Lu 71 28.4m 864
178 Hf 72 stable
178 Ta 73 9.31m 153
178 W 74 21.64d 22
179m Hf 72 25.12d 1097
179m Hf 72 18.67s 358
179m W 74 6.4m 179
.0028
.9972
179 Yb 70 8.17m 2360
179 Lu 71 4.59h 490
179 Hf 72 stable
179 Ta 73 1.82a 33
179 W 74 37.5m 52
180m Hf 72 5.5h 1147
180 Lu 71 5.7m 2142
180 Hf 72 stable
180 Ta 73 8.15h 100
.14
.86
180 W 74 stable
181 Lu 71 3.5m 649
181 Hf 72 42.4d 733
181 Ta 73 stable
181 W 74 121.2d 48

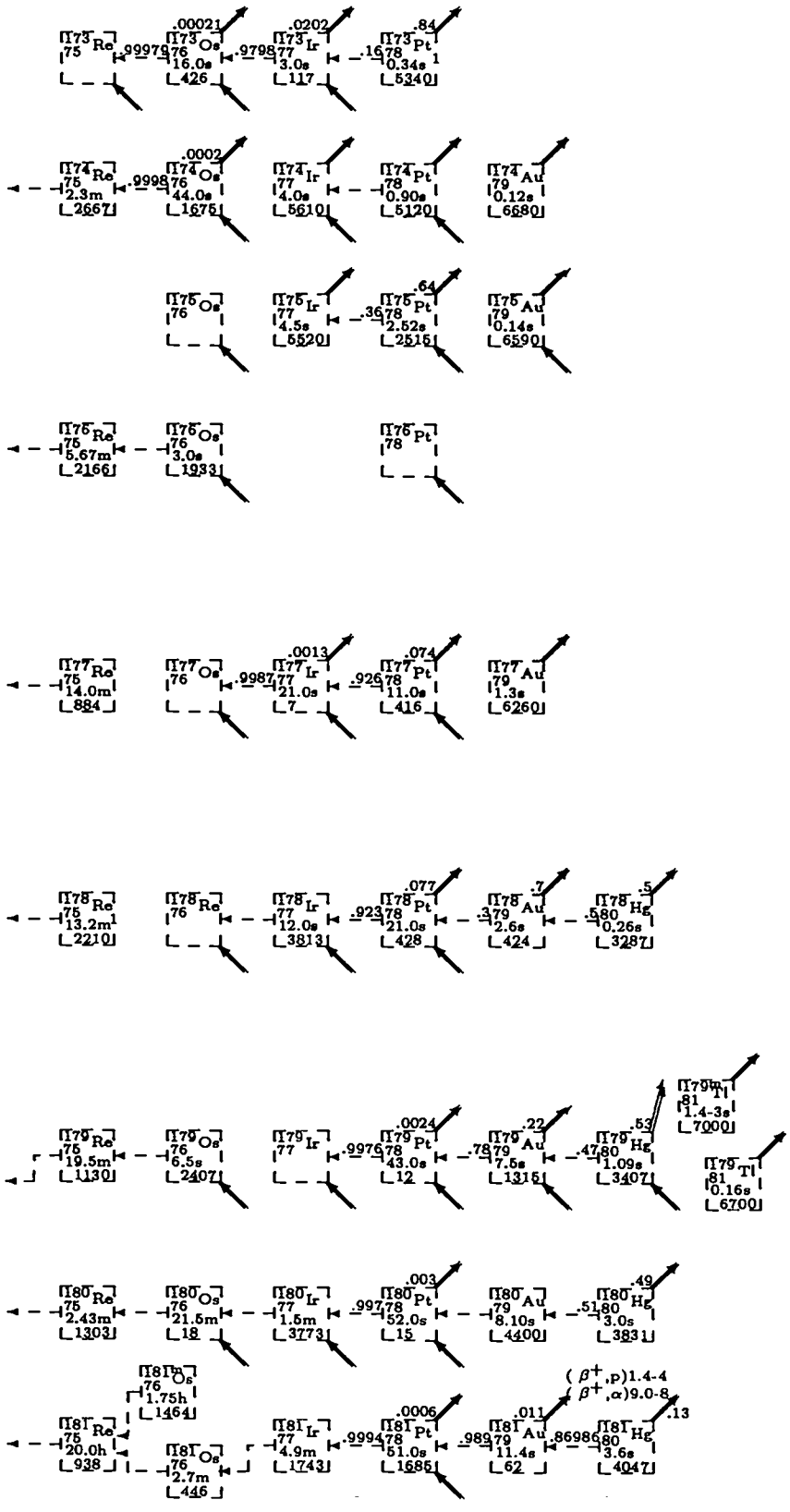
173 Re 75
.9997
173 Os 76
16.0s
426
.00021
.9798
173 Ir 77
3.0s
117
.0202
.16
173 Pt 78
0.34s
5340
.84
174 Re 75
2.3m
2667
.9998
174 Os 76
44.0s
1675
.0002
174 Ir 77
4.0s
5610
174 Pt 78
0.90s
5120
174 Au 79
0.12s
6680
175 Os 76
175 Ir 77
4.5s
5520
.36
175 Pt 78
2.52s
2515
.64
175 Au 79
0.14s
6590
176 Re 75
5.67m
2166
176 Os 76
3.0s
1933
176 Pt 78
177 Re 75
14.0m
884
177 Os 76
.9987
177 Ir 77
21.0s
7
.0013
.926
177 Pt 78
11.0s
416
.074
177 Au 79
1.3s
6260
178 Re 75
13.2m1
2210
178 Re 76
178 Ir 77
12.0s
3813
.923
178 Pt 78
21.0s
428
.077
.379
178 Au 79
2.6s
424
.7
.580
178 Hg 80
0.26s
3287
.5
179 Re 75
19.5m
1130
179 Os 76
6.5s
2407
179 Ir 77
.9976
179 Pt 78
43.0s
12
.0024
.78
179 Au 79
7.5s
1315
.22
.47
179 Hg 80
1.09s
3407
.53
179m Tl 81
1.4-3s
7000
179 Tl 81
0.16s
6700
180 Re 75
2.43m
1303
180 Os 76
21.5m
18
180 Ir 77
1.5m
3773
.997
180 Pt 78
52.0s
15
.003
180 Au 79
8.10s
4400
.51
180 Hg 80
3.0s
3831
.49
181m Os 76
1.75h
1464
181 Re 75
20.0h
938
181 Os 76
2.7m
446
181 Ir 77
4.9m
1743
.9994
181 Pt 78
51.0s
1685
.0006
.989
181 Au 79
11.4s
62
.011
.8698
( β+,p)1.4-4
( β+,α)9.0-8
181 Hg 80
3.6s
4047
.13

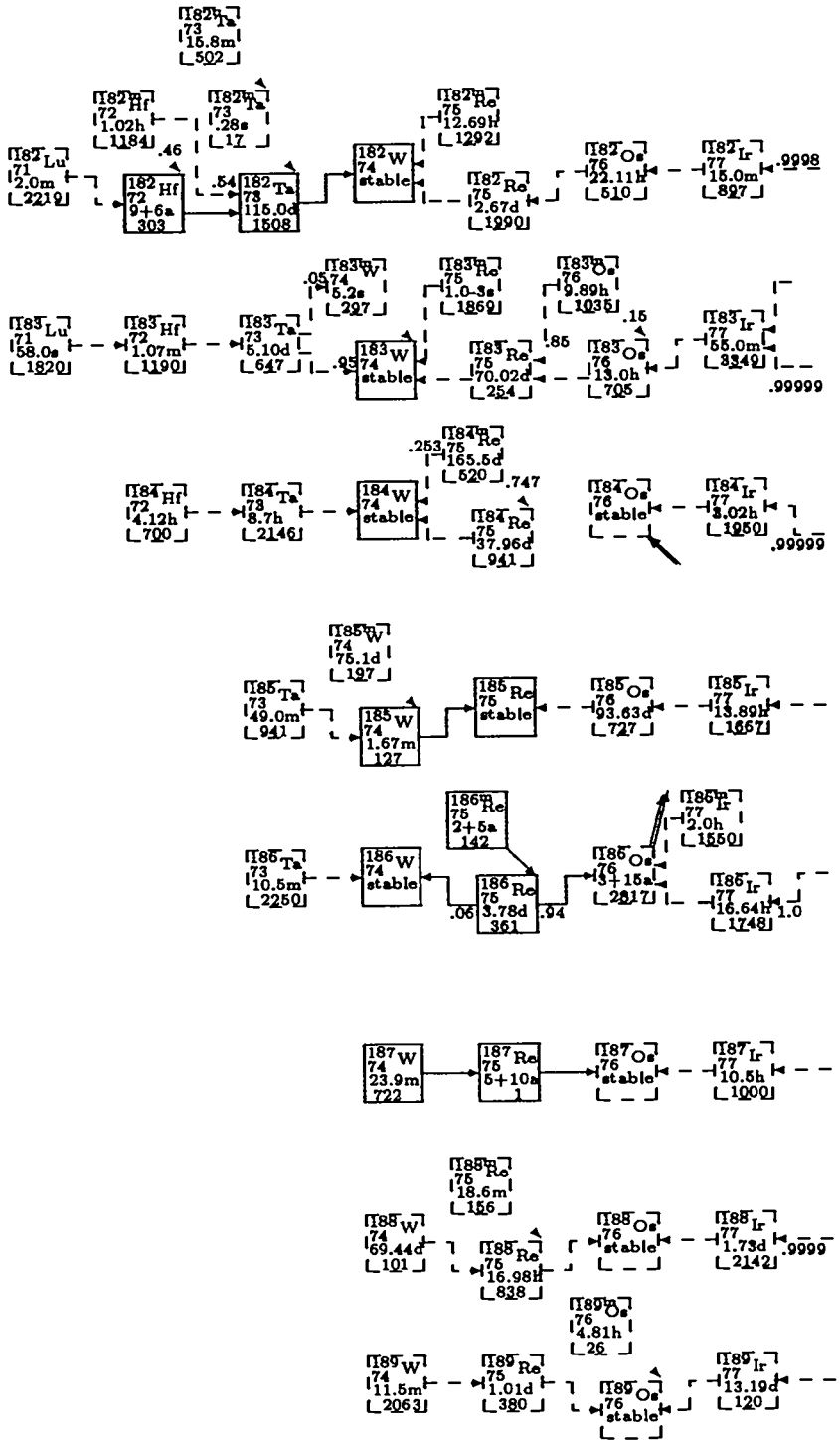
182mTa 73 15.8m 502
182mHf 72 1.02h 1184
182mTa 73 .28s 17
182Lu 71 2.0m 2219
182Hf 72 9+6a 303
182Ta 73 115.0d 1508
182W 74 stable
182mRe 75 12.69h 1292
182Re 75 2.67d 1990
182Os 76 22.11h 510
182Ir 77 15.0m 827
.46
.54
.9998
183mW 74 5.2s 227
183mRe 75 1.0-3s 1869
183mOs 76 9.89h 1035
183Lu 71 58.0s 1820
183Hf 72 1.07m 1190
183Ta 73 5.10d 647
183W 74 stable
183Re 75 70.02d 254
183Os 76 13.0h 705
183Ir 77 55.0m 8342
.05
.95
.85
.15
.99999
184mRe 75 165.5d 520
184Hf 72 4.12h 700
184Ta 73 8.7h 2146
184W 74 stable
184Re 75 37.96d 941
184Os 76 stable
184Ir 77 3.02h 1950
.253
.747
.99999
185mW 74 75.1d 197
185Ta 73 49.0m 941
185W 74 1.67m 127
185Re 75 stable
185Os 76 93.63d 727
185Ir 77 13.89h 1667
186mRe 75 2+5a 142
186mIr 77 2.0h 1550
186Ta 73 10.5m 2250
186W 74 stable
186Re 75 3.78d 361
186Os 76 3+15a 2817
186Ir 77 16.64h 1748
.06
.94
1.0
187W 74 23.9m 722
187Re 75 5+10a 1
187Os 76 stable
187Ir 77 10.5h 1000
188mRe 75 18.6m 156
188W 74 69.44d 101
188Re 75 16.98h 838
188Os 76 stable
188Ir 77 1.73d 2142
.9999
189mOs 76 4.81h 26
189W 74 11.5m 2063
189Re 75 1.01d 380
189Os 76 stable
189Ir 77 13.19d 120

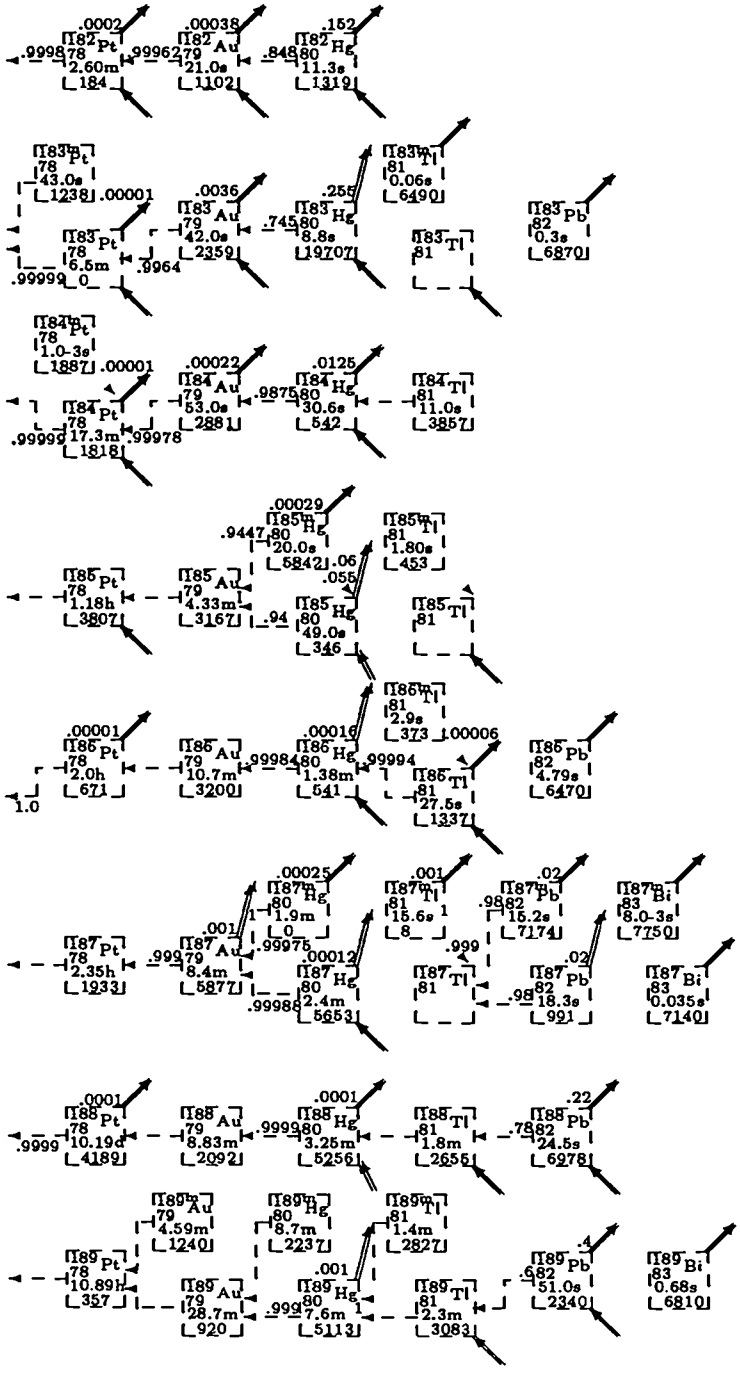
.0002
182 Pt
78
2.60m
184
.9998
.99962
.00038
182 Au
79
21.0s
1102
.848
.152
182 Hg
80
11.3s
1319
183m Pt
78
43.0s
1238
.00001
183 Pt
78
6.5m
0
.99999
.9964
.0036
183 Au
79
42.0s
2359
.745
.255
183 Hg
80
8.8s
1970
183m Tl
81
0.06s
6490
183 Tl
81
183 Pb
82
0.3s
6870
184m Pt
78
1.0-3s
1887
.00001
184 Pt
78
17.3m
1818
.99999
.99978
.00022
184 Au
79
53.0s
288
.9875
.0125
184 Hg
80
30.6s
542
184 Tl
81
11.0s
3857
.00029
185m Hg
80
20.0s
5842
.9447
.06
.055
185m Tl
81
1.80s
453
185 Pt
78
1.18h
3807
185 Au
79
4.33m
3167
.94
185 Hg
80
49.0s
346
185 Tl
81
185m Tl
81
2.9s
373
.00006
.00001
186 Pt
78
2.0h
671
1.0
186 Au
79
10.7m
3200
.9998
.00016
186 Hg
80
1.38m
541
.99994
186 Tl
81
27.5s
1337
186 Pb
82
4.79s
6470
.00025
187m Hg
80
1.9m
1
.001
187 Au
79
8.4m
5877
.99975
.00012
187 Hg
80
2.4m
5653
.99988
.001
187m Tl
81
15.6s
1
8
.999
187 Tl
81
.02
187m Pb
82
15.2s
7174
.9882
187m Bi
83
8.0-3s
7750
.02
187 Pb
82
18.3s
991
.98
187 Bi
83
0.035s
7140
.0001
188 Pt
78
10.19d
4189
.9999
188 Au
79
8.83m
2092
.9999
.0001
188 Hg
80
3.25m
5256
188 Tl
81
1.8m
2656
.22
188 Pb
82
24.5s
6978
.7882
189m Au
79
4.59m
1240
189m Hg
80
8.7m
2237
189m Tl
81
1.4m
2827
189 Pt
78
10.89h
357
189 Au
79
28.7m
920
.999
.001
189 Hg
80
7.6m
5113
189 Tl
81
2.3m
3083
.4
189 Pb
82
51.0s
2340
.682
189 Bi
83
0.68s
6810

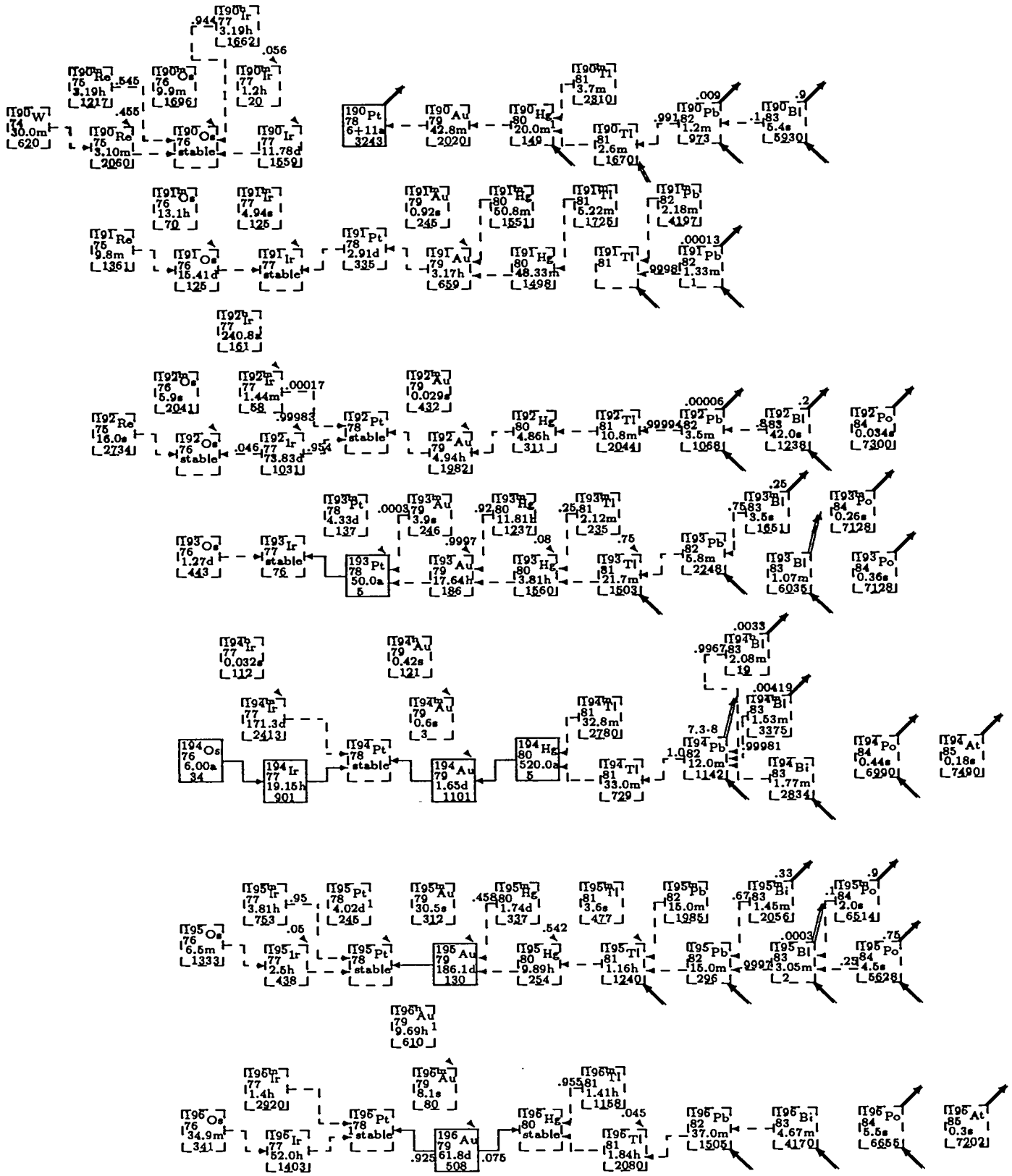

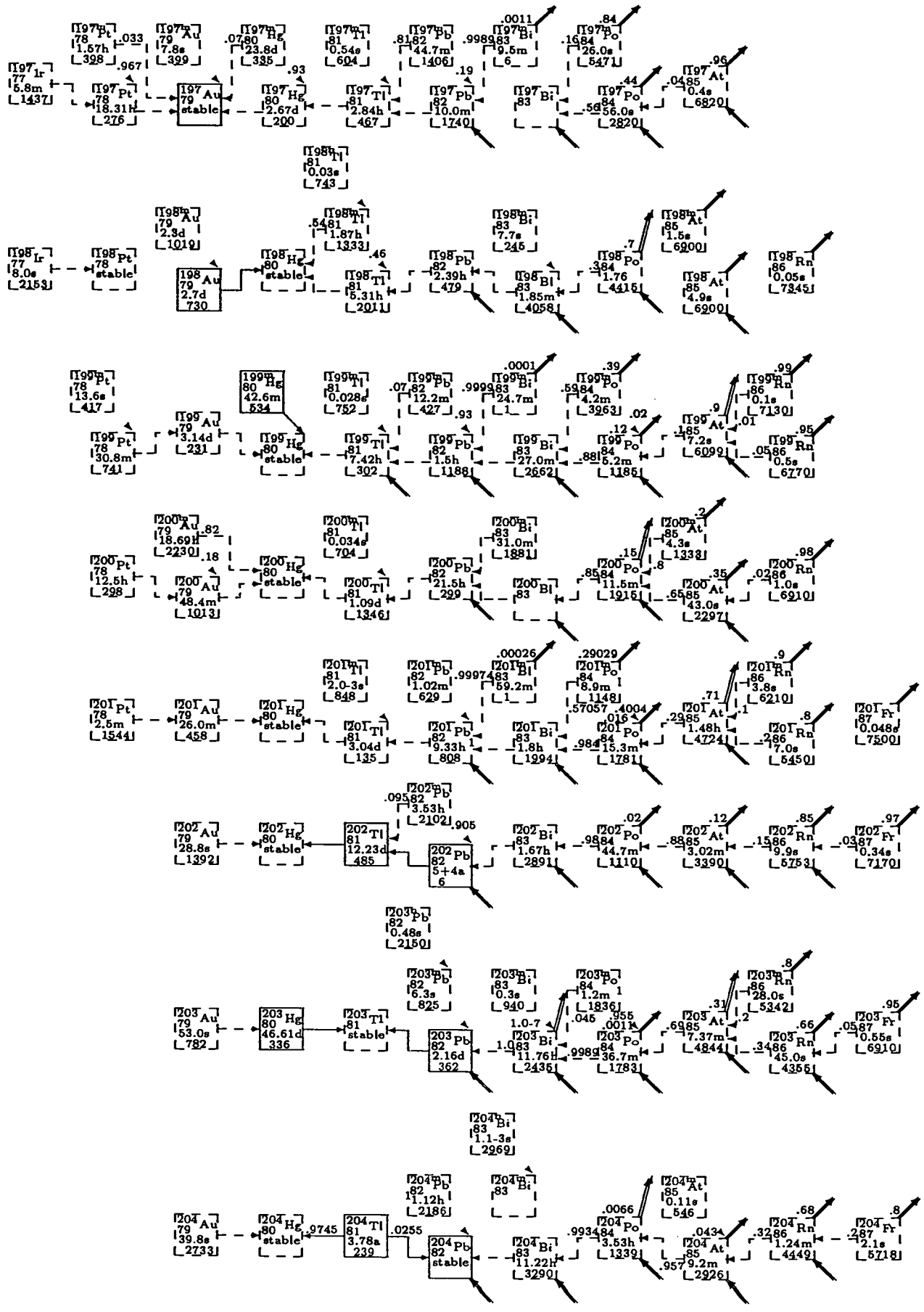
197Ir 77 5.8m 1437
197Pt 78 18.31h 276
197Au 79 stable
197Hg 80 2.67d 200
197Tl 81 2.84h 467
197Pb 82 10.0m 1740
197Bi 83
197Po 84 56.0s 2820
197At 85 0.4s 6820
197Pt 78 1.57h 398
197Au 79 7.8s 399
197Hg 80 23.8d 335
197Tl 81 0.54s 604
197Pb 82 44.7m 1406
197Bi 83 9.5m 6
197Po 84 26.0s 5471
198Tl 81 0.03s 743
198Ir 77 8.0s 2153
198Pt 78 stable
198Au 79 2.7d 730
198Au 79 2.3d 1019
198Hg 80 stable
198Tl 81 5.31h 2011
198Tl 81 1.87h 1333
198Pb 82 2.39h 479
198Bi 83 1.85m 4058
198Bi 83 7.7s 245
198Po 84 1.76 4416
198At 85 4.9s 6900
198At 85 1.5s 6900
198Rn 86 0.05s 7345
199Pt 78 13.6s 417
199Au 79 3.14d 231
199Hg 80 stable
199Hg 80 42.6m 534
199Tl 81 7.42h 302
199Tl 81 0.028s 752
199Pb 82 1.5h 1188
199Pb 82 12.2m 427
199Bi 83 27.0m 2662
199Bi 83 24.7m 1
199Po 84 5.2m 1185
199Po 84 4.2m 3963
199At 85 7.2s 6099
199At 85 0.1s 7130
199Rn 86 0.5s 6770
199Rn 86 0.1s 7130
200Pt 78 12.5h 298
200Au 79 48.4m 1013
200Au 79 18.69h 2230
200Hg 80 stable
200Tl 81 1.09d 1346
200Tl 81 0.034s 704
200Pb 82 21.5h 299
200Bi 83 1.8h 1994
200Bi 83 31.0m 1881
200Po 84 11.5m 1916
200At 85 43.0s 2297
200At 85 4.3s 1338
200Rn 86 1.0s 6910
201Pt 78 2.5m 1544
201Au 79 26.0m 458
201Hg 80 stable
201Tl 81 3.04d 135
201Tl 81 2.0-3s 848
201Pb 82 9.33h 808
201Pb 82 1.02m 629
201Bi 83 1.8h 1994
201Bi 83 59.2m 1
201Po 84 15.3m 1781
201Po 84 8.9m 1148
201At 85 1.48h 4724
201At 85 7.0s 5450
201Rn 86 3.8s 6210
201Fr 87 0.048s 7500
202Au 79 28.8s 1392
202Hg 80 stable
202Tl 81 12.23d 485
202Pb 82 5+4a 6
202Pb 82 3.53h 2102
202Bi 83 1.67h 2891
202Po 84 44.7m 1110
202At 85 3.02m 3390
202Rn 86 9.9s 5753
202Fr 87 0.34s 7170
203Pb 82 0.48s 2150
203Au 79 53.0s 782
203Hg 80 46.61d 336
203Tl 81 stable
203Pb 82 2.16d 362
203Pb 82 6.3s 825
203Bi 83 11.76h 2436
203Bi 83 0.3s 940
203Po 84 36.7m 1783
203Po 84 1.2m 1836
203At 85 7.37m 4844
203Rn 86 45.0s 4365
203Rn 86 28.0s 5342
203Fr 87 0.55s 6910
204Bi 83 1.1-3s 2969
204Au 79 39.8s 2733
204Hg 80 stable
204Tl 81 3.78a 239
204Pb 82 stable
204Pb 82 1.12h 2186
204Bi 83 11.22h 3290
204Bi 83
204Po 84 3.53h 1339
204At 85 9.2m 2926
204At 85 0.11s 546
204Rn 86 1.24m 4449
204Fr 87 2.1s 5718

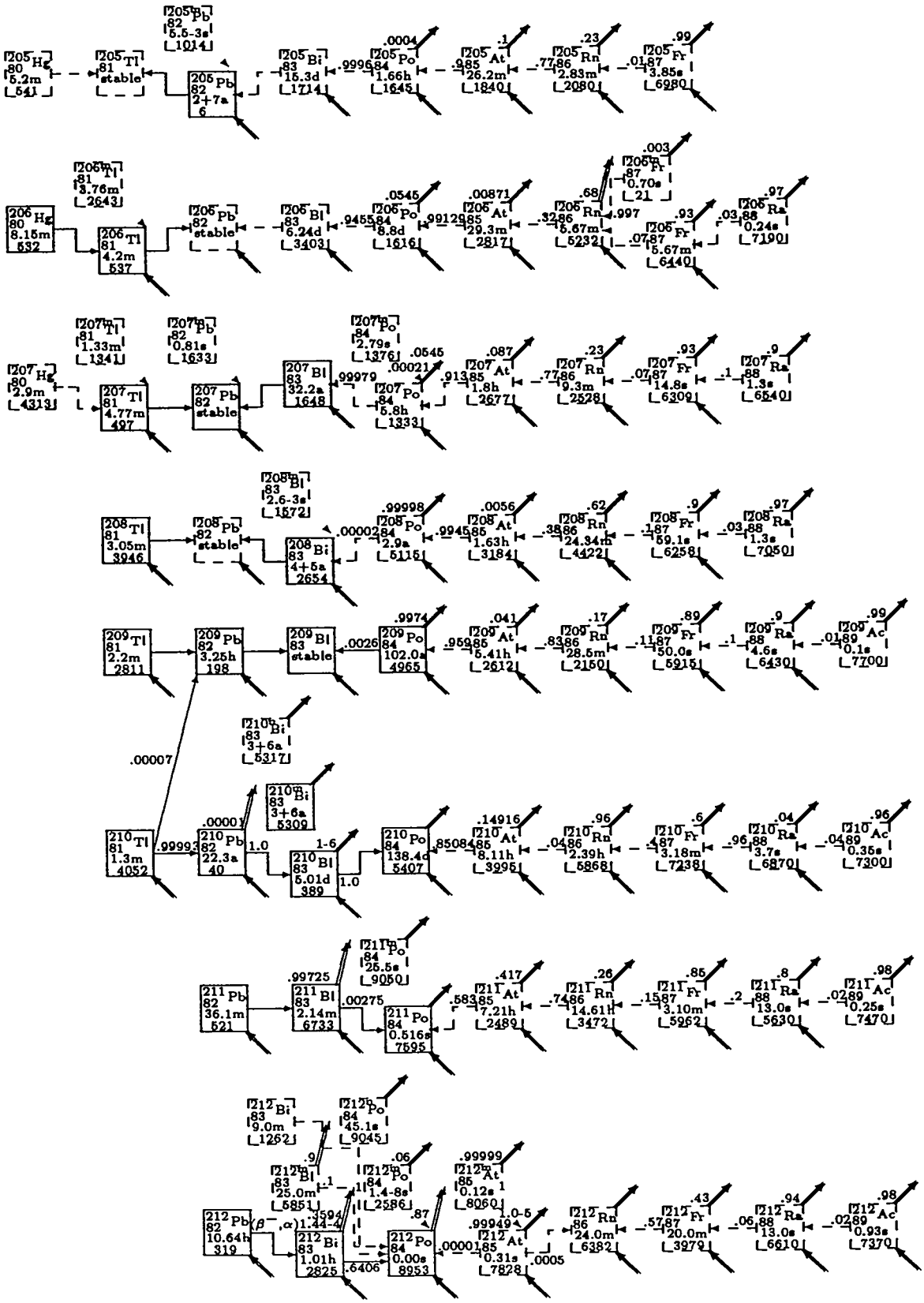
205Hg 80 5.2m 541
205Tl 81 stable
205Pb 82 2+7a 6
205Pb 82 5.6-3s 1014
205Bi 83 15.3d 1714
205Po 84 1.66h 1645
205At 85 26.2m 1840
205Rn 2.83m 2080
205Fr 3.85s 6980
205Tl 81 3.76m 2643
206Hg 80 8.15m 532
206Tl 81 4.2m 537
205Pb 82 stable
205Bi 83 6.24d 3403
205Po 84 8.8d 1616
205At 85 29.3m 2817
205Rn 5.67m 5232
205Fr 5.67m 6140
205Ra 0.24s 7190
207Tl 81 1.33m 1341
207Pb 82 0.81s 1633
207Hg 80 2.9m 4313
207Tl 81 4.77m 497
207Pb 82 stable
207Bi 83 32.2a 1648
207Po 84 5.8h 1333
207Po 84 2.79s 1376
207At 85 1.8h 2677
207Rn 9.3m 2528
207Fr 14.8s 6309
207Ra 1.3s 6540
208Tl 81 3.05m 3946
208Pb 82 stable
208Bi 83 4+5a 2654
208Bi 83 2.6-3s 1572
208Po 84 2.9a 5116
208At 85 1.63h 3184
208Rn 24.34m 4422
208Fr 59.1s 6258
208Ra 1.3s 7050
209Tl 81 2.2m 2811
209Pb 82 3.25h 198
209Bi 83 stable
209Po 84 102.0a 4965
209At 85 5.41h 2612
209Rn 28.5m 2150
209Fr 50.0s 5915
209Ra 4.6s 6430
209Ac 0.1s 7700
210Bi 83 3+6a 5317
210Tl 81 1.3m 4052
210Pb 82 22.3a 40
210Bi 83 3+6a 5309
210Bi 83 5.01d 389
210Po 84 138.4d 5407
210At 85 8.11h 3995
210Rn 2.39h 5868
210Fr 3.18m 7238
210Ra 3.7s 6870
210Ac 0.35s 7300
211Pb 82 36.1m 521
211Bi 83 2.14m 6733
211Po 84 0.516s 7595
211Po 84 25.5s 9050
211At 85 7.21h 2489
211Rn 14.61h 3472
211Fr 3.10m 5962
211Ra 13.0s 5630
211Ac 0.25s 7470
212Bi 83 9.0m 1262
212Po 84 45.1s 9045
212Bi 83 25.0m 5851
212Po 84 1.4-8s 2586
212Pb 82 10.64h 319
212Bi 83 1.01h 2825
212Po 84 0.00s 8953
212At 85 0.12s 1 8060
212At 85 0.31s 7828
212Rn 86 24.0m 6382
212Fr 20.0m 3979
212Ra 13.0s 6610
212Ac 0.93s 7370

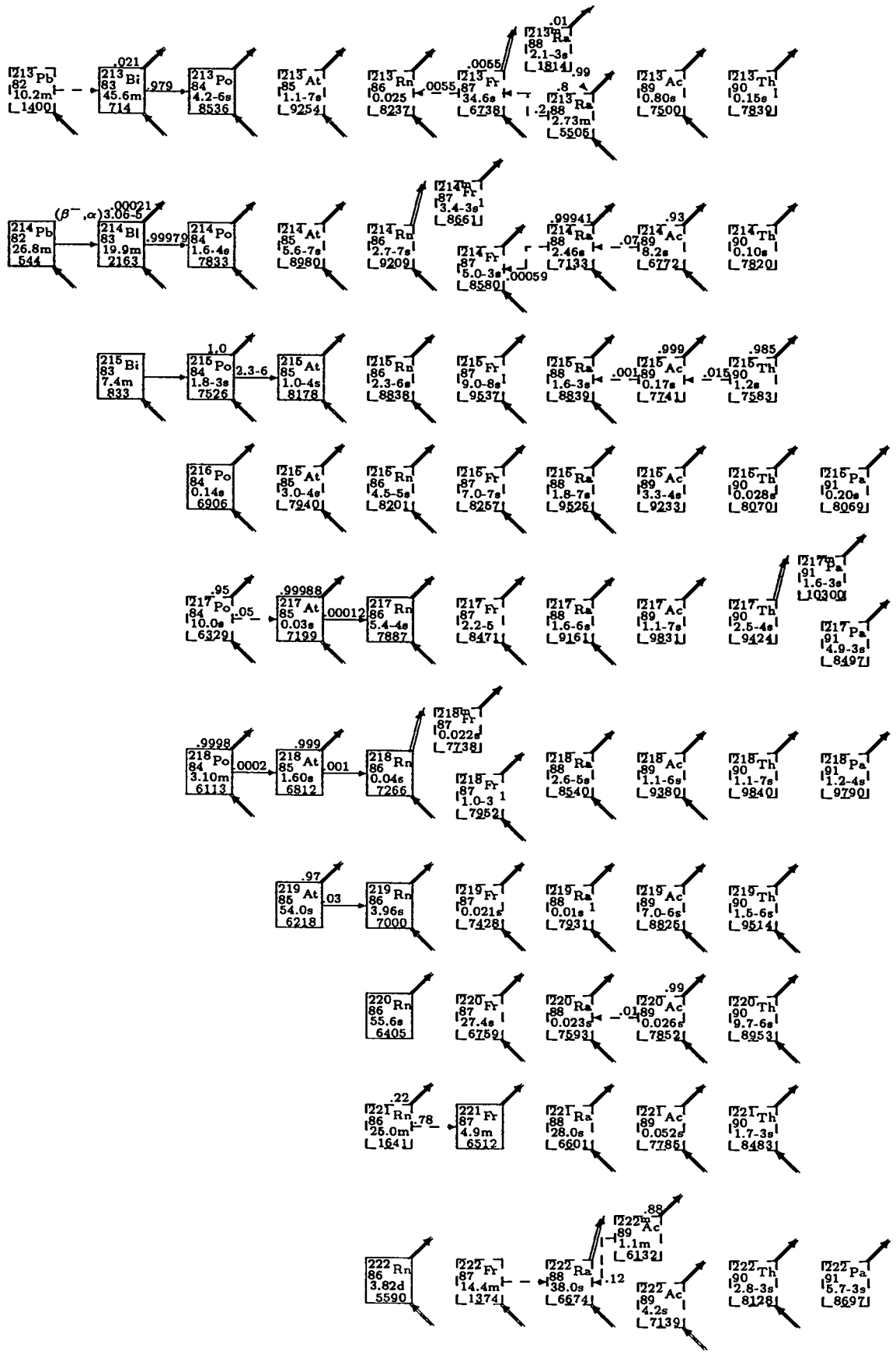
213Pb 82 10.2m 1400
213Bi 83 45.6m 714 .021
213Po 84 4.2-6s 8536 .979
213At 85 1.1-7s 9254
213Rn 86 0.025 8237
213Fr 87 34.6s 6738 .0055
213Ra 88 2.1-3s 1814 .01
213Ra 88 2.73m 5505 .99 .2 .8
213Ac 89 0.80s 7500
213Th 90 0.15s 7839
214Pb 82 26.8m 544
(β−,α) 3.06-5 .00021
214Bi 83 19.9m 2163 .99979
214Po 84 1.6-4s 7833
214At 85 5.6-7s 8980
214Rn 86 2.7-7s 9209
214Fr 87 3.4-3s 8661
214Fr 87 5.0-3s 8580 .00059
214Ra 88 2.46s 7133 .99941
214Ac 89 8.2s 6772 .07 .93
214Th 90 0.10s 7820
215Bi 83 7.4m 833
215Po 84 1.8-3s 7526 1.0 2.3-6
215At 85 1.0-4s 8178
215Rn 86 2.3-6s 8838
215Fr 87 9.0-8s 9537
215Ra 88 1.6-3s 8839 .001
215Ac 89 0.17s 7741 .999 .015
215Th 90 1.2s 7583 .985
216Po 84 0.14s 6906
216At 85 3.0-4s 7940
216Rn 86 4.5-5s 8201
216Fr 87 7.0-7s 8257
216Ra 88 1.8-7s 9526
216Ac 89 3.3-4s 9233
216Th 90 0.028s 8070
216Pa 91 0.20s 8069
217Po 84 10.0s 6329 .95 .05
217At 85 0.03s 7199 .99988 .00012
217Rn 86 5.4-4s 7887
217Fr 87 2.2-5 8471
217Ra 88 1.6-6s 9161
217Ac 89 1.1-7s 9831
217Th 90 2.5-4s 9424
217Pa 91 1.6-3s 10300
217Pa 91 4.9-3s 8497
218Po 84 3.10m 6113 .9998 .0002
218At 85 1.60s 6812 .999 .001
218Rn 86 0.04s 7266
218Fr 87 0.022s 7738
218Fr 87 1.0-3 1 7952
218Ra 88 2.6-5s 8540
218Ac 89 1.1-6s 9380
218Th 90 1.1-7s 9840
218Pa 91 1.2-4s 9790
219At 85 54.0s 6218 .97 .03
219Rn 86 3.96s 7000
219Fr 87 0.021s 7428
219Ra 88 0.01s 1 7931
219Ac 89 7.0-6s 8825
219Th 90 1.5-6s 9514
220Rn 86 55.6s 6405
220Fr 87 27.4s 6759
220Ra 88 0.023s 7593
220Ac 89 0.026s 7852 .01 .99
220Th 90 9.7-6s 8953
221Rn 86 26.0m 1641 .22 .78
221Fr 87 4.9m 6512
221Ra 88 28.0s 6601
221Ac 89 0.052s 7785
221Th 90 1.7-3s 8483
222Rn 86 3.82d 5590
222Fr 87 14.4m 1374
222Ra 88 38.0s 6674 .12
222Ac 89 1.1m 6132 .88
222Ac 89 4.2s 7139
222Th 90 2.8-3s 8128
222Pa 91 5.7-3s 8697

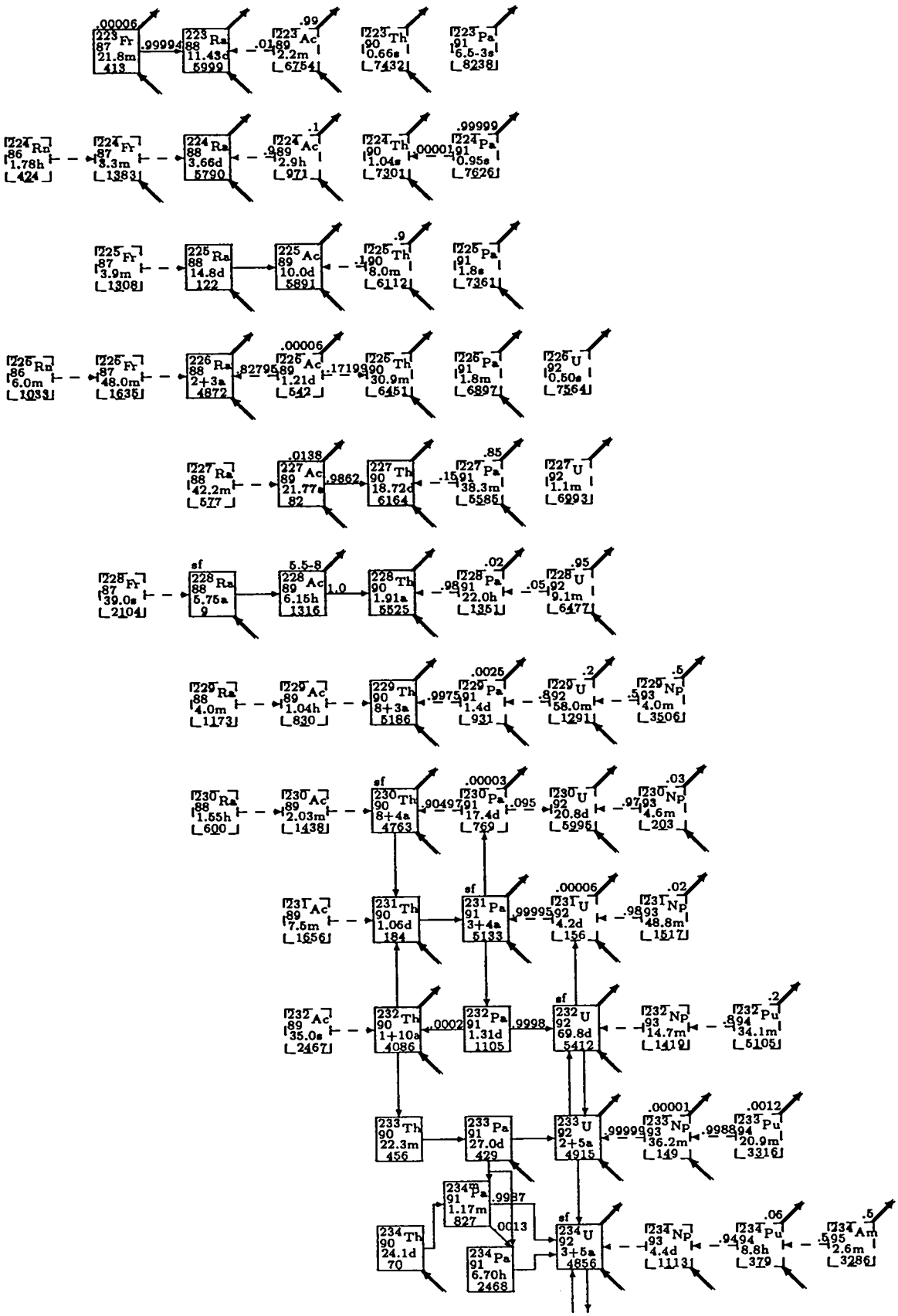
223 Fr 87 21.8m 413
.00006
.99994
223 Ra 88 11.43d 5999
.01
223 Ac 89 2.2m 6754
.99
223 Th 90 0.66s 7432
223 Pa 91 6.5-3s 8238
224 Rn 86 1.78h 424
224 Fr 87 3.3m 1383
224 Ra 88 3.66d 5790
.989
224 Ac 89 2.9h 971
.1
224 Th 90 1.04s 7301
.00001
224 Pa 91 0.95s 7626
.99999
225 Fr 87 3.9m 1308
225 Ra 88 14.8d 122
225 Ac 89 10.0d 5891
.1
225 Th 90 8.0m 6112
.9
225 Pa 91 1.8s 7361
226 Rn 86 6.0m 1033
226 Fr 87 48.0m 1635
226 Ra 88 2+3a 4872
.82795
226 Ac 89 1.21d 542
.00006
.1719
226 Th 90 30.9m 6451
226 Pa 91 1.8m 6897
226 U 92 0.50s 7564
227 Ra 88 42.2m 577
227 Ac 89 21.77a 82
.0138
.9862
227 Th 90 18.72d 6164
227 Pa 91 38.3m 5585
.85
.1591
227 U 92 1.1m 6993
228 Fr 87 39.0s 2104
sf
228 Ra 88 5.75a 9
228 Ac 89 6.15h 1316
5.5-8
1.0
228 Th 90 1.91a 5525
228 Pa 91 22.0h 1351
.02
.9891
228 U 92 9.1m 6477
.95
.05
229 Ra 88 4.0m 1173
229 Ac 89 1.04h 830
229 Th 90 8+3a 5186
.9975
229 Pa 91 1.4d 931
.0025
229 U 92 58.0m 1291
.2
.892
229 Np 93 4.0m 3506
.5
.593
230 Ra 88 1.55h 600
230 Ac 89 2.03m 1438
230 Th 90 8+4a 4763
sf
.9049
230 Pa 91 17.4d 769
.00003
.095
230 U 92 20.8d 5996
.9793
230 Np 93 4.6m 203
.03
231 Ac 89 7.5m 1656
231 Th 90 1.06d 184
231 Pa 91 3+4a 5133
sf
.99995
231 U 92 4.2d 156
.00006
.9893
231 Np 93 48.8m 1517
.02
232 Ac 89 35.0s 2467
232 Th 90 1+10a 4086
.0002
232 Pa 91 1.31d 1105
.9998
232 U 92 69.8d 5412
sf
232 Np 93 14.7m 1419
.8994
232 Pu 94 34.1m 5105
.2
233 Th 90 22.3m 456
233 Pa 91 27.0d 429
233 U 92 2+5a 4915
.99999
.00001
233 Np 93 36.2m 149
.9988
233 Pu 94 20.9m 3316
.0012
234m Pa 91 1.17m 827
.9987
.0013
234 Th 90 24.1d 70
234 Pa 91 6.70h 2468
234 U 92 3+5a 4856
sf
234 Np 93 4.4d 1113
.9494
234 Pu 94 8.8h 379
.06
.595
234 Am 95 2.6m 3286
.5

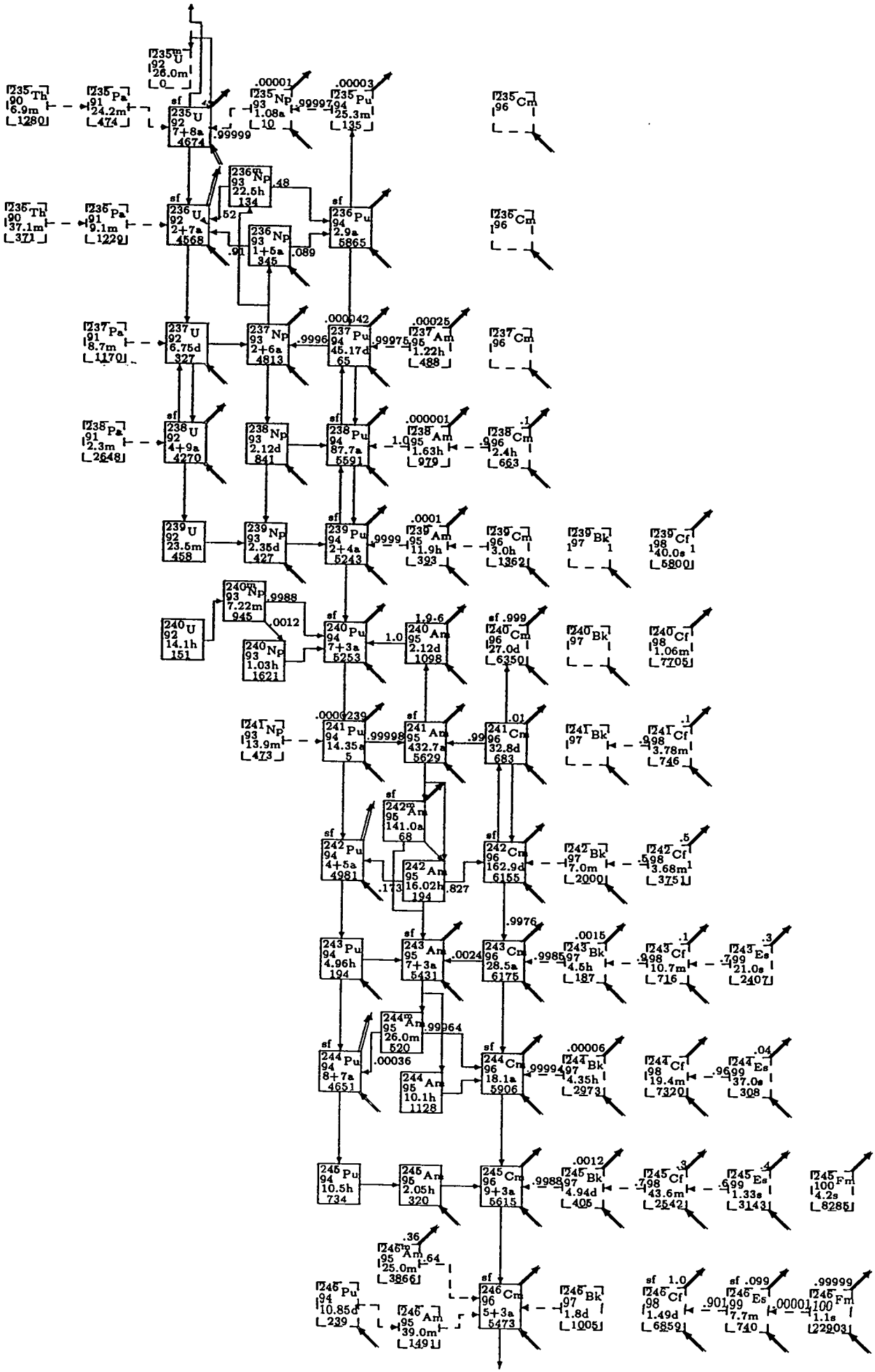
235mU 92 26.0m 0
235Th 90 6.9m 1280
235Pa 91 24.2m 474
235U 92 7+8a 4674
sf
.99999
.00001
235Np 93 1.08a 10
.99997
.00003
235Pu 94 25.3m 135
235Cm 96
236mNp 93 22.5h 134
.48
236Th 90 37.1m 371
236Pa 91 9.1m 1229
236U 92 2+7a 4568
.52
.91
236Np 93 1+5a 345
.089
236Pu 94 2.9a 5865
236Cm 96
237Pa 91 8.7m 1170
237U 92 6.75d 327
237Np 93 2+6a 4813
.9996
.000042
237Pu 94 45.17d 65
.99975
.00025
237Am 95 1.22h 488
237Cm 96
238Pa 91 2.3m 2648
238U 92 4+9a 4270
238Np 93 2.12d 841
238Pu 94 87.7a 5591
1.0
.000001
238Am 95 1.63h 979
.996
.1
238Cm 96 2.4h 663
239U 92 23.5m 458
239Np 93 2.35d 427
239Pu 94 2+4a 5243
.9999
.0001
239Am 95 11.9h 393
239Cm 96 3.0h 1362
239Bk 97 1
239Cf 98 40.0s 1 5800
240mNp 93 7.22m 945
.9988
.0012
240U 92 14.1h 151
240Np 93 1.03h 1621
240Pu 94 7+3a 5253
1.0
1.9-6
240Am 95 2.12d 1098
sf .999
240Cm 96 27.0d 6350
240Bk 97
240Cf 98 1.06m 7705
241Np 93 13.9m 473
.00006
239
241Pu 94 14.35a 5
.99998
241Am 95 432.7a 5629
.99
.01
241Cm 96 32.8d 683
241Bk 97
.1
241Cf 98 3.78m 746
.998
242mAm 95 141.0a 68
242Pu 94 4+5a 4981
.173
242Am 95 16.02h 194
.827
.5
242Cm 96 162.9d 6155
242Bk 97 7.0m 2000
242Cf 98 3.68m 375
.998
243Pu 94 4.96h 194
243Am 95 7+3a 5431
.0024
.9976
243Cm 96 28.5a 6175
.0015
243Bk 97 4.5h 187
.1
243Cf 98 10.7m 716
.3
243Es 99 21.0s 2407
.999
244mAm 95 26.0m 520
.99964
244Pu 94 8+7a 4651
.00036
244Am 95 10.1h 1128
244Cm 96 18.1a 5906
.9999
.00006
244Bk 97 4.35h 2973
244Cf 98 19.4m 7320
.04
244Es 99 37.0s 308
.9999
245Pu 94 10.5h 734
245Am 95 2.05h 320
245Cm 96 9+3a 5615
.9988
.0012
245Bk 97 4.94d 405
.3
245Cf 98 43.6m 2542
.7
245Es 99 1.33s 3143
.4
245Fm 100 4.2s 8285
.36
245mAm 95 25.0m 3866
.64
246Pu 94 10.85d 239
246Am 95 39.0m 1491
246Cm 96 5+3a 5473
246Bk 97 1.8d 1005
sf 1.0
246Cf 98 1.49d 6859
sf .099
246Es 99 7.7m 740
.99999
.00001
246Fm 100 1.1s 22903

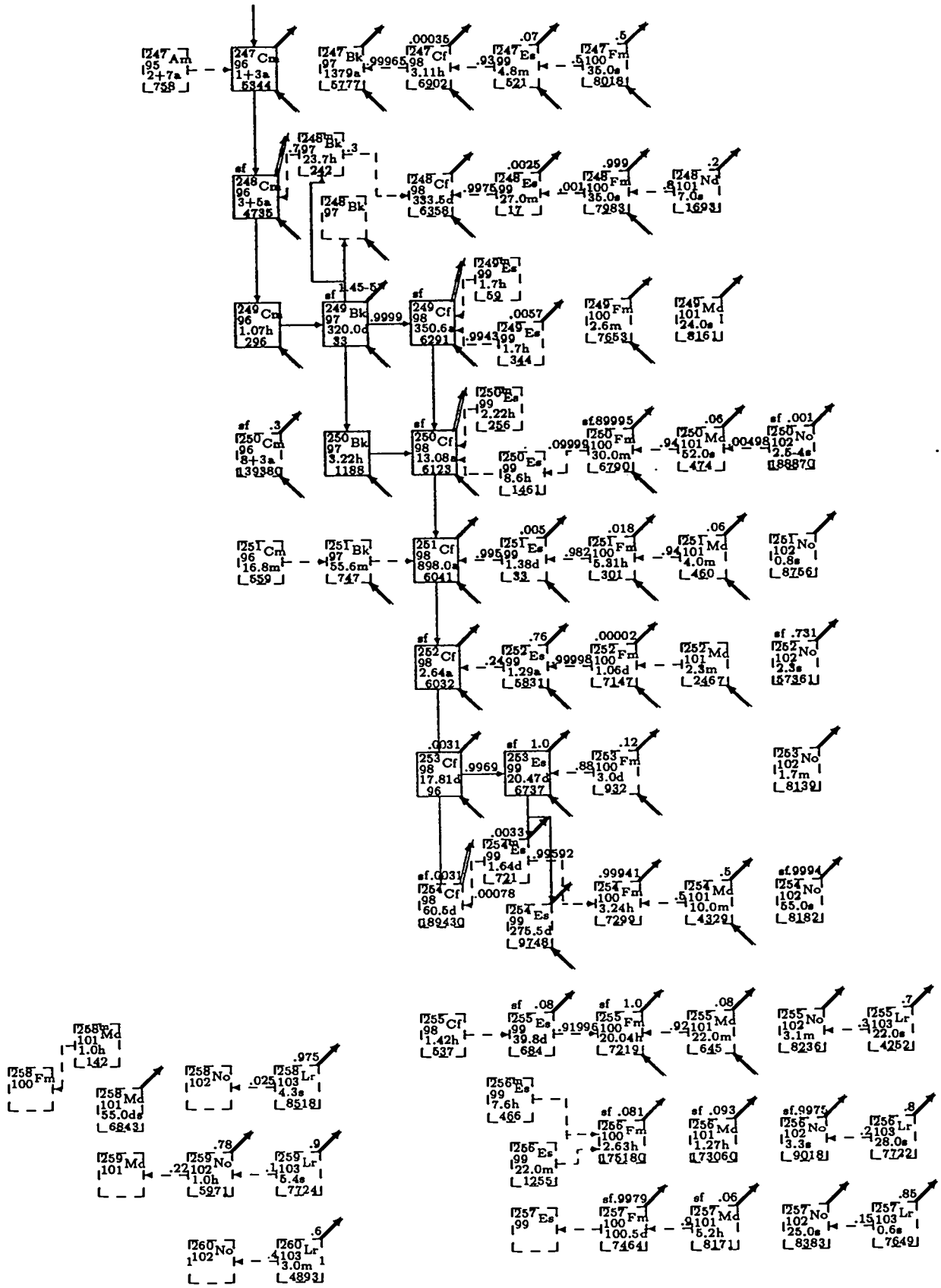
247 Am 95 2+7a 758
247 Cm 96 1+3a 5344
247 Bk 97 1379a 5777
.99965
.00035
247 Cf 98 3.11h 6902
.93999
.07
247 Es 99 4.8m 521
.5
247 Fm 100 35.0s 8018
248 Bk .797 23.7h 242
.3
sf 248 Cm 96 3+5a 4735
248 Bk 97
248 Cf 98 333.5d 6358
.9975
.0025
248 Es 99 27.0m 17
.001
.999
248 Fm 100 35.0s 7983
.2
248 Nd 101 7.0s 1693
249 Es 99 1.7h 59
sf 1.45-5
249 Cm 96 1.07h 296
249 Bk 97 320.0d 33
.9999
sf 249 Cf 98 350.6a 6291
.9943
.0057
249 Es 99 1.7h 344
249 Fm 100 2.6m 7653
249 Md 101 24.0s 8161
250 Es 99 2.22h 256
sf .3
250 Cm 96 8+3a 39380
250 Bk 97 3.22h 1188
sf 250 Cf 98 13.08a 6123
.09999
250 Es 99 8.6h 1461
sf.89995
250 Fm 100 30.0m 6790
.94
.06
250 Md 101 52.0s 474
.00498
sf .001
250 No 102 2.5-4s 88870
251 Cm 96 16.8m 659
251 Bk 97 55.6m 747
251 Cf 98 898.0a 6041
.995
.005
251 Es 99 1.38d 33
.982
.018
251 Fm 100 5.31h 301
.94
.06
251 Md 101 4.0m 460
251 No 102 0.8s 8756
sf 252 Cf 98 2.64a 6032
.24
.76
252 Es 99 1.29a 5831
.99998
.00002
252 Fm 100 1.06d 7147
252 Md 101 2.3m 2467
sf .731
252 No 102 2.3s 57361
.0031
253 Cf 98 17.81d 96
.9969
sf 1.0
253 Es 99 20.47d 6737
.88
.12
253 Fm 100 3.0d 932
253 No 102 1.7m 8139
.0033
254m Es 99 1.64d 721
.99592
sf .0031
254 Cf 98 60.5d 89430
.00078
254 Es 99 275.5d 97481
.99941
254 Fm 100 3.24h 7299
.5
254 Md 101 10.0m 4329
sf .9994
254 No 102 55.0s 8182
255 Cf 98 1.42h 537
sf .08
255 Es 99 39.8d 684
.91996
sf 1.0
255 Fm 100 20.04h 7219
.92
.08
255 Md 101 22.0m 645
255 No 102 3.1m 8236
.7
255 Lr 103 22.0s 4252
256m Es 99 7.6h 466
sf .081
256 Fm 100 2.63h 76180
256 Es 99 22.0m 1255
sf .093
256 Md 101 1.27h 73060
sf.9975
256 No 102 3.3s 90180
.8
256 Lr 103 28.0s 7722
257 Es 99
sf.9979
257 Fm 100 100.5d 74640
sf .06
257 Md 101 5.2h 81710
257 No 102 25.0s 83830
.85
257 Lr 103 0.6s 76490
258 Fm 100
258 Md 101 1.0h 142
258 Md 101 55.0ds 68430
258 No 102
.025
258 Lr 103 4.3s 85180
.975
259 Md 101
.22
259 No 102 1.0h 59710
.78
.1
259 Lr 103 6.4s 77240
.9
260 No 102
.4
260 Lr 103 3.0m 1 48930
.6

LOS ALAMOS NAT'L LAB.
IB-4 REPORT SECTION
RECEIVED

'94 MAY 26 PM 1 07